MIL-HDBK-419A
29 DECEMBER 1987

SUPERSEDING
MIL-HDBK-419
21 JANUARY 1982

MILITARY HANDBOOK

GROUNDING, BONDING, AND SHIELDING FOR ELECTRONIC EQUIPMENTS AND FACILITIES

VOLUME II OF 2 VOLUMES
APPLICATIONS

AMSC N/A

EMCS/SLHC/TCTS

DISTRIBUTION STATEMENT A. Approved for public release; distribution is unlimited

DEPARTMENT OF DEFENSE
WASHINGTON DC 20301

MIL-HDBK-419A

GROUNDING, BONDING, AND SHIELDING FOR ELECTRONIC EQUIPMENTS AND FACILITIES

1. This standardization handbook was developed by the Department of Defense in accordance with established procedure.

2. This publication was approved on 29 December 1987 for printing and inclusion in the military standardization handbook series. Vertical lines and asterisks are not used in this revision to identify changes with respect to the previous issue due to the extensiveness of the changes.

3. This document provides basic and application information on grounding, bonding, and shielding practices recommended for electronic equipment. It will provide valuable information and guidance to personnel concerned with the preparation of specifications and the procurement of electrical and electronic equipment for the Defense Communications System. The handbook is not intended to be referenced in purchase specifications except for informational purposes, nor shall it supersede any specification requirements.

4. Every effort has been made to reflect the latest information on the interrelation of considerations of electrochemistry, metallurgy, electromagnetics, and atmospheric physics. It is the intent to review this handbook periodically to insure its completeness and currency. Users of this document are encouraged to report any errors discovered and any recommendations for changes or inclusions to: Commander, 1842 EEG/EEITE, Scott AFB IL 62225-6348.

5. Copies of Federal and Military Standards, Specifications and associated documents (including this handbook) listed in the Department of Defense Index of Specifications and Standards (DODISS) should be obtained from the DOD Single Stock Point: Commanding Officer, Naval Publications and Forms Center, 5801 Tabor Avenue, Philadelphia PA 19120. Single copies may be obtained on an emergency basis by calling (AUTOVON) 442-3321 or Area Code (215)-697-3321. Copies of industry association documents should be obtained from the sponsor. Copies of all other listed documents should be obtained from the contracting activity or as directed by the contracting officer.

PREFACE

This volume is one of a two-volume series which sets forth the grounding, bonding, and shielding applications for communications electronics (C-E) equipments and facilities. Grounding, bonding, and shielding are complex subjects about which in the past there has existed a good deal of misunderstanding. The subjects themselves are interrelated and involve considerations of a wide range of topics from electrochemistry and metallurgy to electromagnetic field theory and atmospheric physics. These two volumes reduce these varied considerations into a usable set of principles and practices which can be used by all concerned with, and responsible for, the safety and effective, operation of complex C-E systems. Where possible, the principles are reduced to specific steps. Because of the large number of interrelated factors, specific steps cannot be set forth for every possible situation. However, once the requirements and constraints of a given situation are defined, the appropriate steps for solution of the problem can be formulated utilizing the principles set forth.

Both volumes (Volume I, Basic Theory and Volume II, Applications) implement the Grounding, Bonding, and Shielding requirements of MIL-STD-188-124A which is mandatory for use within the Department of Defense. The purpose of this standard is to ensure the optimum performance of groundbased telecommunications equipment by reducing noise and providing adequate protection against power system faults and lightning strikes.

This handbook emphasizes the necessity for including considerations of grounding, bonding, and shielding in all phases of design, construction, operation, and maintenance of electronic equipment and facilities. Volume I, Basic Theory, develops the principles of personnel protection, fault protection, lightning protection, interference reduction, and EMP protection for C-E facilities. In addition, the basic theories of earth connections, signal grounding, electromagnetic shielding, and electrical bonding are presented. The subjects are not covered independently, rather they are considered from the standpoint of how they influence the design of the earth electrode subsystem of a facility, the selection of ground reference networks for equipments and structures, shielding requirements, facility and equipment bonding practices, etc. Volume I also provides the basic background of theory and principles that explain the technical basis for the recommended practices and procedures; illustrates the necessity for care and thoroughness in implementation of grounding, bonding, and shielding, and provides supplemental information to assist in the solution of those problems and situations not specifically addressed.

In Volume II, Applications, the principles and theories, including RED/BLACK protection, are reduced to the practical steps and procedures which are to be followed in structural and facility development, electronic engineering, and in equipment development. These applications should assure personnel, equipment and structural safety, minimize electromagnetic interference (EMI) problems in the final operating system; and minimize susceptibility to and generation of undesirable emanations. The emphasis in Volume11 goes beyond development to assembly and construction, to installation and checkout, and to maintenance for long term use.

Four appendices are provided as common elements in both volumes. Appendix A is a glossary of selected words and terms as they are used herein. If not defined in the glossary, usage is in accordance with Federal Standard 1037, Glossary of Telecommunication Terms. Appendix B is a supplemental bibliography containing selected references intended to supply the user with additional material. Appendix C contains the table of contents for the other volume. Appendix D contains the index for the two-volume set.

TABLE OF CONTENTS

CHAPTER 1 - NEW FACILITIES DESIGN CRITERIA

Paragraph		Page
1.1	INTRODUCTION	1-1
1.2	EARTH ELECTRODE SUBSYSTEM	1-2
1.2.1	Determination of Site Parameters.	1-2
1.2.1.1	Soil Resistivity	1-2
1.2.1.2	Geological Effects	1-5
1.2.1.3	Physical Features	1-5
1.2.1.4	Local Climate	1-5
1.2.2	Design Procedure	1-6
1.2.2.1	Selection of Electrode Configuration	1-6
1.2.2.2	Calculation of Earth Resistance.	1-9
1.2.2.3	Alternate Configurations.	1-9
1.2.3	Design Guidelines.	1-14
1.2.4	Installation Practices	1-22
1.3	LIGHTNING PROTECTION FOR STRUCTURES.	1-23
1.3.1	Principles of Protection	1-23
1.3.2	Integral Protection System	1-23
1.3.2.1	Air Terminals	1-24
1.3.2.1.1	Size and Materials	1-24
1.3.2.1.2	Location.	1-24
1.3.2.2	Grounding Conductors.	1-33
1.3.2.2.1	Roof Conductors	1-33
1.3.2.2.2	Down Conductors	1-37
1.3.2.3	Fasteners	1-39
1.3.3	Separately Mounted Protection Systems	1-40
1.3.3.1	Mast Type	1-40
1.3.3.2	Overhead Ground Wire Type	1-41
1.3.3.3	Waveguide Installation and Grounding	1-42
1.3.3.4	Cable Installation and Grounding	1-49
1.3.3.5	Lightning Generated Transient Surge Protection	1-49
1.3.3.5.1	Transient Source and Equipment Damage.	1-49
1.3.3.5.2	Minimizing Damage	1-50
1.3.3.5.3	Susceptible Components	1-50
1.3.3.5.4	Frequency of Transient Occurrence	1-51
1.3.3.5.5	Transient Definition, AC Service Conductors	1-51
1.3.3.5.6	Methods for Transient Protection on AC Service Conductors	1-56
1.3.3.5.7	Use of Ferrous Metal Conduit.	1-56
1.3.3.5.8	Use of Overhead Guard Wires.	1-56

TABLE OF CONTENTS (Continued)

CHAPTER 1 - NEW FACILITIES DESIGN CRITERIA

Paragraph		Page
1.3.3.5.9	Protection of Underground Cables.	1-57
1.3.3.5.10	Buried Guard Wire	1-57
1.3.3.5.11	Secondary AC Surge Arrester.	1-59
1.3.3.5.12	Surge Arrester Installation	1-59
1.3.3.5.13	Operating Characteristics of Surge Arresters	1-60
1.3.3.5.14	Desirable Operating Characteristics for Transient Suppressors	1-67
1.3.3.5.15	Characteristics of Different Types of Surge Arresters	1-67
1.3.3.5.16	Transient Protection for Externally Exposed Equipment Lines	1-73
1.3.3.5.17	Frequency of Transient Occurrence	1-73
1.3.3.5.18	Amplitudes and Waveforms of Occurring Transients	1-73
1.3.3.5.19	Equipment Withstand Levels	1-74
1.3.3.5.20	Protection Methods Against Transients.	1-74
1.3.3.5.21	Enclosing Cable Runs in Ferrous Metal Conduit	1-74
1.3.3.5.22	Transient Suppression	1-75
1.3.3.5.23	Types of Available Transient Suppression.	1-77
1.3.3.5.24	Operating Characteristics of Transient Suppressors	1-77
1.3.3.5.25	Transient Suppressor Packaging Design.	1-78
1.3.3.5.26	Coaxial Cable Shield Connection Through an Entrance Plate	1-78
1.3.3.5.27	Grounding of Unused Wires	1-78
1.3.3.5.28	Transient Suppression for RF Coaxial Lines.	1-79
1.3.3.5.29	Equipment-Level Transient Suppression	1-79
1.3.3.6	Lightning Generated Transient Protection Evaluation	1-79
1.3.3.7	Transient Protection	1-80
1.3.3.7.1	Protection Requirement	1-80
1.3.3.7.2	Transient Definition.	1-81
1.3.3.7.3	Determination of Equipment Damage (Withstand) Levels	1-82
1.3.3.7.4	Determination of Need for Transient Protection.	1-83
1.3.3.7.5	Minimizing Transient Damage	1-83
1.3.3.7.6	AC Power Input.	1-84
1.3.3.7.7	Power Supply Transient Suppression	1-89
1.3.3.7.8	Landline Transient Suppression	1-89
1.3.3.8	Corrosion Control.	1-98
1.3.3.9	Joints	1-99
1.3.3.10	Physical Protection	1-99
1.4	FAULT PROTECTIVE SUBSYSTEM	1-99
1.4.1	Purpose	1-99
1.4.2	Equipment Fault Protection Subsystem Composition	1-100

TABLE OF CONTENTS (Continued)

CHAPTER 1 - NEW FACILITIES DESIGN CRITERIA

Paragraph		Page
1.4.3	Configuration of the Equipment Fault Protection Subsystem	1-100
1.4.4	Pipes and Tubes.	1-102
1.4.5	Electrical Supporting Structures	1-102
1.4.5.1	Metal Conduit	1-103
1.4.5.2	Cable Trays	1-103
1.4.5.3	Enclosures	1-103
1.4.5.4	Cable Armor.	1-103
1.4.5.5	Rotating Machinery	1-103
1.4.6	Power Distribution Systems	1-104
1.4.7	Standby AC Generators	1-104
1.4.8	Equipment Fault Protection Subsystems for Transportable Equipment	1-104
1.4.9	MIL-STD-188-124A and NEC Compliance Evaluation.	1-105
1.4.9.1	Measurements	1-105
1.4.9.2	MIL-STD-188-124A and NEC Compliance Inspection.	1-105
1.4.9.3	Correction of Deficiencies	1-111
1.5	SIGNAL REFERENCE SUBSYSTEM FOR NEW FACILITIES	1-113
1.5.1	Higher Frequency Network.	1-113
1.5.1.1	Multipoint Ground System	1-118
1.5.1.1.1	Types of Equipotential Planes.	1-120
1.5.1.1.1.1	Copper Grid Embedded in Concrete	1-120
1.5.1.1.1.2	Equipotential Plane Under Floor Tile or Carpet	1-120
1.5.1.1.1.3	Overhead Equipotential Plane.	1-120
1.5.1.1.1.4	Raised (Computer) Flooring	1-120
1.5.1.1.1.4.1	Bolted-Grid (Stringer) or Rigid Grid System.	1-125
1.5.1.1.1.4.2	Drop-In or Removable Grid System	1-131
1.5.1.1.1.4.3	Free-Standing, Pedestal-Only or Stringerless System	l-131
1.5.1.1.1.5	Ground Risers	1-131
1.5.1.1.1.6	Equipment Cabinet Grounding	l-131
1.5.2	Lower Frequency Signal Reference Network	l-131
1.6	GROUNDING PHILOSOPHY FOR EQUIPMENTS PROCESSING NATIONAL SECURITY RELATED INFORMATION (RED/BLACK EQUIPMENTS)	1-134
1.7	BONDING PRACTICES	1-140
1.7.1	Application Guidelines.	1-140
1.7.2	Surface Preparation	1-142
1.7.3	Bond Protection Code	1-143
1.7.3.1	Jumper Fasteners.	1-147
1.7.4	Typical Bonds	1-148

TABLE OF CONTENTS (Continued)

CHAPTER 1 - NEW FACILITIES DESIGN CRITERIA

Paragraph		Page
1.7.4.1	Cable Trays	1-148
1.7.4.2	Tubing and Conduit	1-149
1.7.4.3	Other Examples.	1-149
1.8	SHIELDING	1-154
1.8.1	Establishing Requirements	1-154
1.8.2	Design Guidelines.	1-159
1.8.3	Selection of Materials	1-160
1.8.4	Construction Guidelines	1-162
1.9	COMMON-MODE NOISE AND INSTRUMENTATION	l-164
1.9.1	Design Practices	1-171
1.9.2	Instrumentation Considerations	1-172
1.10	EMP PROTECTION	1-172
1.10.1	Earth Connection	1-172
1.10.2	EMP Shield Applications	1-173
1.10.3	EMP Bonding Practices	1-173
1.10.4	Construction Guidelines	1-176
1.11	MILITARY MOBILE FACILITIES	1-177
1.11.1	General Tactical Grounding Requirements	1-177
1.11.1.1	Facility Ground System	1-177
1.11.1.1.1	Earth Ground.	1-177
1.11.1.1.1.1	General Earth Electrode Subsystem Requirements	1-177
1.11.1.1.1.2	Earth Electrode Subsystem Types	1-177
1.11.1.1.1.3	Soil Resistance	1-178
1.11.1.1.1.4	Ground Rod Resistance	1-178
1.11.1.1.1.5	Ground Resistance Shells.	1-178
1.11.1.1.2	Power Ground	1-178
1.11.1.1.2.1	Three-Phase Power Distribution System	1-178
1.11.1.1.2.2	Single-Phase Power Distribution System	1-179
1.11.1.1.2.3	DC Power System (P-Wire)	1-179
1.11.1.1.3	Lightning/EMP Protection Subsystem	1-179
1.11.1.1.3.1	Air Terminals	1-179
1.11.1.1.3.2	Terminal Protection Devices	1-182
1.11.1.1.4	Signal Reference Subsystem	1-182
1.11.1.1.5	Fault Protection Subsystem	1-182
1-11.1.2	Measuring Ground Resistance in Tactical Environments	1-182
1.11.1.3	Reducing Ground Resistance in Tactical Environments	1-182
1.11.1.3.1	Existing Facilities	1-182

TABLE OF CONTENTS (Continued)

CHAPTER 1 - NEW FACILITIES DESIGN CRITERIA

Paragraph		Page
1.11.1.3.2	Multiple Electrode System	1-185
1.11.1.3.3	Earth Electrode Subsystem	1-185
1.11.1.3.4	Chemical Treatment	1-185
1.11.2	Detailed Tactical Grounding Requirements	1-185
1.11.2.1	Introduction	1-185
1.11.2.1.1	Training.	1-186
1.11.2.1.2	Testing	1-186
1.11.2.2	Stand-Alone Equipment	1-186
1.11.2.2.1	General Description	1-186
1.11.2.2.2	Grounding Procedure	1-186
1.11.2.2.2.1	Low Resistance Grounds	1-186
1.11.2.2.2.1.1	Existing Facilities.	1-186
1.11.2.2.2.1.2	Earth Electrode Subsystem, Single Ground Rod	1-187
1.11.2.2.2.1.3	Earth Electrode Subsystem, Multiple Ground Rods	1-187
1.11.2.3	Stand-Alone Shelter	1-187
1.11.2.3.1	General Description.	1-187
1.11.2.3.2	Interconnection of Subsystems	1-187
1.11.2.4	Collocated Military Mobile Equipments	1-187
1.11.2.4.1	General Description	1-187
1.11.2.4.2	Grounding Procedure	1-188
1.11.2.5	Collocated Shelters	1-188
1.11.2.5.1	General Description	1-188
1.11.2.5.2	Grounding Procedure	1-188
1.11.2.5.2.1	Power Ground	1-188
1.11.2.5.2.2	Signal Ground	1-188
1.11.2.5.2.3	Fault Protection Subsystem	1-188
1.11.2.5.2.4	Lightning/EMP Protection	1-189
1.11.2.5.2.5	Collocated Shelters Greater than 8 Meters Apart	1-189
1.11.2.5.2.5.1	Ground Resistance Difference of Less than 150 Ohms	1-189
1.11.2.5.2.5.2	Ground Resistance Difference of Greater than 150 Ohms.	1-189
1.11.2.5.2.5.3	Earth Electrode Subsystem	1-190
1.11.2.5.2.5.3.1	Power Ground	1-190
1.11.2.5.2.5.3.2	Signal Ground	1-190
1.11.2.5.2.5.3.3	Safety/Equipment Ground (Green Wire)	1-190
1.11.2.5.2.5.3.4	Lightning/EMP Protection	1-190
1.11.2.6	Fixed Prefabricated Shelters	1-190
1.11.2.6.1	General Description	1-190

TABLE OF CONTENTS (Continued)

CHAPTER 1 - NEW FACILITIES DESIGN CRITERIA

Paragraph		Page
1.11.2.6.2	Electrical Connection	1-190
1.12	FENCES.	1-191
1.12.1	Introduction	1-191
1.12.2	Grounding	1-191
1.12.3	Installation.	1-191
1.13	INSPECTION AND TEST PROCEDURES FOR A NEW FACILITY	1-193
1.13.1	Earth Electrode Subsystem	1-193
1.13.2	Lightning Protection Network	1-194
1.13.3	Signal Reference and Fault Protection Subsystems.	1-194
1.13.4	Bonds and Bonding	1-195
1.13.5	Facility Checkout Form	1-196
	Part I Earth Electrode Subsystem	1-196
	Part II Lightning Protection Network	1-197
	Part III Facility Ground System	1-198
	Part IV Bonding	1-199
1.14	REFERENCES	1-200

CHAPTER 2 - EXISTING FACILITIES

2.1	INTRODUCTION	2-1
2.2	UPGRADING.	2-1
2.2.1	Drawings	2-4
2.2.2	Facility Survey	2-4
2.2.2.1	Survey Steps	2-4
2.2.2.2	Inspection Procedure	2-5
2.2.2.2.1	Earth Electrode Subsystem	2-5
2.2.2.2.2	Bonds and Bonding	2-10
2.2.2.2.3	Lightning Protection Network	2-13
2.2.2.2.4	Safety Grounding	2-16
2.2.2.2.5	Signal Grounding Practices	2-17
2.2.2.2.6	Ground System Noise Survey	2-17
2.2.2.2.7	Shielding.	2-19
2.2.2.3	Test Procedures	2-19
2.2.2.3.1	Bond Resistance	2-19
2.2.2.3.2	Ground System Noise Current.	2-20
2.2.2.3.3	Differential Noise Voltage	2-22
2.2.2.4	Survey Form	2-24

TABLE OF CONTENTS (Continued)

CHAPTER 2 - EXISTING FACILITIES

Paragraph		Page
2.2.3	Guidelines for Upgrading.	2-33
2.2.4	Expansion of Existing Facilities.	2-35
2.2.5	Expansion of Existing Facilities for Higher-Frequency Grounds	2-35
2.3	MAINTENANCE	2-36
2.3.1	Schedules and Records.	2-36
2.3.2	Maintenance Procedures	2-36
2.3.2.1	Earth Electrode Subsystem	2-39
2.3.2.2	Lightning Protection Subsystem.	2-41
2.3.2.3	Bonding	2-42
2.3.2.4	Fault Protection Subsystem (Safety Ground)	2-43
2.3.2.5	Signal Reference Subsystem (Signal Grounding)	2-44
2.3.2.6	Shielding.	2-45
2.3.3	Facility Maintenance Report	2-46
2.3.4	Performance Evaluation Program	2-54
2.4	GROUNDING CONSIDERATIONS FOR CLASSIFIED INFORMATION PROCESSORS (RED/BLACK EQUIPMENTS) INSTALLED PRIOR TO THIS HANDBOOK	2-59
2.4.1	Introduction	2-59
2.4.2	Existing Facilities.	2-59
2.4.3	Protection Grounds	2-59
2.4.4	Signal Reference Subsystem	2-60
2.4.5	Signal Filter Ground.	2-61
2.4.6	Grounding Precautions.	2-61

CHAPTER 3 - EQUIPMENT DESIGN CRITERIA

3.1	INTRODUCTION	3-1
3.2	GROUNDING PROCEDURES.	3-1
3.2.1	Signal Grounds	3-1
3.2.1.1	Lower Frequency Equipment	3-2
3.2.1.1.1	Signal Ground Network Configuration	3-2
3.2.1.1.2	Signal Ground Terminals	3-2
3.2.1.1.3	Color Code.	3-3
3.2.1.1.4	Cabinet Bus Bar	3-3
3.2.1.1.5	Isolation.	3-4
3.2.1.1.6	Signal Interfacing.	3-4
3.2.1.1.7	Signal Grounding	3-6
3.2.1.2	Higher Frequency Equipment	3-12

TABLE OF CONTENTS (Continued)

CHAPTER 3 - EQUIPMENT DESIGN CRITERIA

Paragraph		Page
3.2.1.2.1	Signal Interfaces	3-13
3.2.1.2.2	Cable Connectors	3-13
3.2.1.3	Equipments Containing Both Lower and Higher Frequency Circuits	3-14
3.2.2	Fault Protection	3-14
3.2.3	Cabinet Grounding	3-16
3.3	BONDING PRACTICES	3-18
3.4	SHIELDING GUIDELINES	3-25
3.4.1	Parts Selection	3-25
3.4.2	Layout and Construction	3-25
3.4.3	Equipment Enclosures	3-27
3.4.3.1	Seams	3-27
3.4.3.2	Penetrations and Apertures	3-28
3.5	COMMON-MODE NOISE CONTROL AND INSTRUMENTATION GROUNDING	3-34
3.5.1	Common-Mode Noise Control	3-34
3.5.2	Instrumentation Grounding	3-34
3.5.2.1	Analog Systems	3-35
3.5.2.1.1	Grounded Transducers	3-35
3.5.2.1.2	Ungrounded Transducers	3-38
3.5.2.1.3	Amplifiers	3-38
3.5.2.2	Digital Data Systems	3-40
3.5.2.3	Recording Devices	3-40
3.5.2.3.1	Magnetic Tape Recorders	3-40
3.5.2.3.2	Strip Chart Recorders	3-42
3.5.2.3.3	X-Y Plotters	3-42
3.6	EMP CONSIDERATIONS	3-42
3.7	EQUIPMENT INSPECTION AND TEST PROCEDURES	3-43
3.7.1	Lower Frequency Equipments	3-43
3.7.2	Higher Frequency Equipments	3-47
3.7.3	Hybrid Equipments	3-47
3.7.4	Installed Equipments	3-47
3.7.5	Fault Protection Subsystem	3-47
3.7.6	Bonding	3-49
3.7.7	Shielding	3-49
3.7.8	Instrumentation System	3-50
3.7.9	EMP Design	3-50
3.7.10	Other Observations	3-50
3.7.11	Inspection Form	3-50
3.8	REFERENCES	3-54

TABLE OF CONTENTS (Continued)

CHAPTER 4 - NOTES

Paragraph		Page
4.1	SUBJECT TERM (KEY WORD) LISTING	4-1

APPENDICES

A	GLOSSARY	A-1
B	SUPPLEMENTAL BIBLIOGRAPHY	B-1
BI	SUBJECT CROSS REFERENCE	B-1
BII	LISTINGS	B-2
C	TABLE OF CONTENTS FOR VOLUME I	C-1
D	INDEX	D-1

LIST OF FIGURES

Figure		Page
1-1	Measurement of Soil Resistivity.	1-3
1-2	Resistivity Determination of a Small Site	1-4
1-3	Minimum Earth Electrode Subsystem Configuration for Rectangular Shaped Facility	1-10
1-4	Nomograph for Determining the Resistance to Earth of a Single Ground Rod	1-11
1-5	Effective Resistance of Ground Rods When Arranged in a Straight Line or a Large Circle	1-12
1-6	Graph of Multiple-Rod Resistance Ratio	1-13
1-7	Electrode Configuration for Irregular Shaped Facility	1-16
1-8	Electrode Configuration for Adjacent Structures	1-17
1-9	Electrode Configuration for Closely Spaced Structures	1-17
1-10	Grounding System for Typical Radar Installation	1-18
1-11	Details of Ground Rod/Earth Electrode Subsystem Installation	1-19
1-12	Concrete Grounding Well.	1-20
1-13	Typical Grounding Well Installation	1-20
1-14	Connections to Earth Electrode Subsystem	1-21
1-15	Grounding Practices for Lightning Protection	1-25
1-16	Location of Air Terminals for Common Roof Types	1-26
1-17	Location of Air Terminals on Gently Sloping Roofs	1-27
1-18	Air Terminal Placement on Flat-Roofed Structures	1-29
1-19	Graphical-Method for Determining Need for Additional Air Terminals	1-30
1-20	Field Expedient Technique for Determining the Protection of Prominent Dormers	1-31
1-21	Illustration of Method for Determining the Protection of Flat Surfaces as Provided by Air Terminals	1-32
1-22	Criteria for Dead End Coverage.	1-37
1-23	Recommended Construction Practices for Integral Lightning Protection Systems	1-38
1-24	The Protected Zone Provided by Two Vertical Masts	1-40
1-25	Overhead Ground Wire Lightning Protection System	1-41
1-26	Waveguide Entry Plate Detail.	1-43
1-27	Grounding Detail for Elliptical Waveguide (Front View).	1-44
1-28A	Grounding Detail for Elliptical Waveguide (Side View)	1-45
1-28B	Heat Shrink Grounding.	1-46
1-29	Ground Strap Detail for Elliptical Waveguide	1-46
1-30	Strap Cutting Detail for Elliptical Waveguide	1-46
1-31	Typical Communication Cable Entry Installation	1-47
1-32	Ground Strap Detail.	1-48
1-33	Grounding Steps for Cables.	1-48
1-34	Mean Number of Thunderstorm Days per Year for the United States	1-53
1-35	Lightning Protection for Underground Service.	1-58
1-36	Secondary AC Surge Arrester Installation, Grounded Service	1-61
1-37	Secondary AC Surge Arrester Installation, Ungrounded Service	1-62

LIST OF FIGURES (Continued)

Figure		Page
1-38	Typical Operating Curve for Two Series of Gas-filled Spark Gap Arresters With Nonlinear Series Resistor	1-69
1-39	Typical Arrester Operating Curves, ZNR and SAS	1-72
1-40	Typical Transient Suppressor Installation, Facility and Equipment Level	1-76
1-41	Typical Configuration for Protection of Equipment from Conducted Powerline Surges and Transients (Neutral Grounded).	1-86
1-42	Typical Configuration for Protection of Equipment from Conducted Powerline Surges and Transients (Ungrounded)	1-87
1-43	Typical Configuration for Protection of Equipment from Conducted Landline Transients	1-92
1-44	Transient Suppression for Coaxial Lines (DC to 3 MHz).	1-95
1-45	Transient Suppression for Twinaxial Lines (DC to 3 MHz)	1-96
1-46	Typical Equipment Fault Protection Subsystem	1-101
1-47	Method for Determining the Existence of Improper Neutral Ground Connections.	1-112
1-48	(Deleted)	
1-49	Typical Equipotential Ground Plane for Multi-Deck Building	1-115
1-50	Typical Building Floor Plan (Top View).	1-116
1-51	Typical Multi-Deck Building Plan (Side View)	1-117
1-52	Elements of the Facility Ground System (With Grid)	1-121
1-53	Typical Equipotential Ground Plane for New Construction Higher or Hybrid Frequencies Facilities Installation.	1-122
1-54	Ground Connector for Equipotential Plane in Concrete.	1-123
1-55	Typical Ground Connectors.	1-123
1-56	Example of Cable to Bar Ground Connectors	1-124
1-57	(Deleted)	
1-58	Rigid Grid Floor System Details.	1-127
1-59	Example of Rigid Grid to Pedestal Bolted Connection	1-128
1-60	Example of Rigid-Grid to Pedestal Clamped Connection	1-129
1-61	Example of Unacceptable Grid to Pedestal Bonding	1-130
1-62	Example of Drop-In Grid Floor Construction	1-131
1-63	Example of Pedestal Only Floor Construction.	1-132
1-64	Typical Equipment Cabinet Grounding Detail	1-133
1-65	Typical RED/BLACK Signal Reference Subsystem	1-135
1-66	Typical RED Signal, Shield Ground, Bus Distribution System	1-136
1-67	Typical Intermediate Distribution Frame (Shield Ground Bus in Distribution Frames)	1-137
1-68	Typical Intermediate Distribution Frame (Data Concentrator Frame Installation)	1-138
1-69	Facility Power and AC Ground Distribution.	1-139
1-70	Order of Assembly for Bolted Connection	1-142
1-71	Bonding of Cable Trays	1-148

LIST OF FIGURES (Continued)

Figure		Page
5-12	Single-Point Signal Ground (for Lower Frequencies)	5-20
5-13	Single-Point Ground Bus System Using Separate Risers (Lower Frequency)	5-21
5-14	Single-Point Ground Bus System Using a Common Bus	5-22
5-15	Use of Single-Point Ground Configuration to Minimize Effect of Facility Ground Currents.	5-23
5-16	Multipoint Ground Configuration	5-24
5-17	Use of Structural Steel in Multiple-Point Grounding	5-25
5-18	Recommended Signal Coupling Practice for Lower Frequency Equipment	5-29
5-19	Ground Network Used as Signal Return (Practice Not Generally Recommended)	5-30
6-1	Idealized Energy Transfer Loop	6-2
6-2	Energy Transfer Loop With Noise Sources in Ground System.	6-3
6-3	Equivalent Circuit of Non-Ideal Energy Transfer Loop	6-3
6-4	Practical Combinations of Source-Load Pairs.	6-4
6-5	Coupling Between Circuits Caused by Common Return Path Impedance.	6-7
6-6	Conductive Coupling of Extraneous Noise into Equipment Interconnecting Cables	6-7
6-7	Magnetic Field Surrounding a Current-Carrying Conductor	6-8
6-8	Illustration of Inductive Coupling	6-9
6-9	Illustration of Capacitive Coupling	6-11
6-10	Equivalent Circuit of Network in Figure 6-9	6-13
6-11	Characteristic Voltage Transfer Curve for Capacitive Coupling	6-15
6-12	Electric Field Patterns in the Vicinity of a Radiating Dipole	6-16
6-13	Illustration of Conductively-Coupled Common-Mode Noise	6-18
6-14	Common-Mode Noise in Unbalanced Systems	6-20
6-15	Common-Mode Noise in Balanced Systems	6-22
7-1	Effects of Poor Bonding on the Performance of a Power Line Filter	7-2
7-2	Current Flow Through Direct Bonds	7-5
7-3	Nature of Contact Between Bond Members	7-6
7-4	Resistance of a Test Bond as a Function of Fastener Torque	7-9
7-5	Typical Exothermic Connections	7-12
7-6	Typical Bond Configuration Which Can be Implemented With the Exothermic Process.	7-13
7-7	Nomograph for Torque on Bolts	7-15
7-8	Bonding Path Established by Rivets	7-17
7-9	An Improperly Riveted Seam	7-17
7-10	Inductive Reactance of ‘Wire and Strap Bond Jumpers	7-22
7-11	Relative Inductive Reactance Versus Length-to-Width Ratio of Flat Straps	7-23
7-12	Frequency Variation of the Impedance of Simple Conductors	7-24
7-13	Equivalent Circuit for Bonding Strap.	7-24

LIST OF FIGURES (Continued)

Figure		Page
2-6	Typical Bonding Deficiencies	2-11
2-7	Typical Bonding Deficiencies	2-12
2-8	Severely Damaged Down Conductor	2-14
2-9	Method for Determining the Existence of Improper Neutral Ground Connections	2-15
2-10	Measurement of Stray Current Level in Safety Ground Conductor	2-16
2-11	Typical Bond Resistance and Stray Current Measurement Locations in an Electronic Facility	2-18
2-12	Bond Resistance Measurement Technique.	2-21
2-13	Test Setup for Stray Current Measurements	2-22
2-14	Oscilloscope Connections for Measuring Voltage Levels on Ground Systems	2-23
2-15	Example of Equipotential or Multipoint Grounding.	2-37
2-16	Major Discrepancy Report Form	2-38
2-17	Typical Multiple Area Ground Distribution	2-62
2-18	Typical Signal, Shield Ground, Bus Distribution System for Single-Point Ground	2-63
2-19	Crypto Equipment Grounds.	2-64
2-20	Typical Facility Ground System	2-65
3-1	Grounding in Lower Frequency Equipment	3-3
3-2	Lower Frequency Signal Ground Bus Bar Installation in Rack or Cabinet	3-5
3-3	Use of Balanced Lines to Avoid Ground Loops.	3-7
3-4	Effect of an Unbalanced Cable on the Single-Point Ground	3-8
3-5	Effect of Arbitrarily Grounding the Source End of Unbalanced Equipment Interconnecting Cables	3-9
3-6	Method of Grounding the Individual Shields on Long Lower Frequency Shield Cables	3-10
3-7	Grounding of Overall Cable Shields to Connectors	3-11
3-8	Grounding of Overall Cable Shields to Penetrated Walls	3-12
3-9	Establishment of Shield Continuity Between Higher Frequency Equipments	3-13
3-10	Grounding Practices in Equipments Containing Both Higher Frequency and Lower Frequency Circuits	3-15
3-11	Typical Equipment Cabinet Grounding Detail	3-17
3-12	Acceptable and Unacceptable Uses of Bonding Jumpers	3-19
3-13	Bonding of Subassemblies to Equipment Chassis	3-21
3-14	Bonding of Equipment to Mounting Surface	3-21
3-15	Typical Method of Bonding Equipment Flanges to Frame or Rack	3-22
3-16	Bonding of Rack-Mounted Equipments Employing Dagger Pins.	3-22
3-17	Recommended Practices for Effective Bonding in Cabinets	3-23
3-18	Method of Bonding Across Hinges	3-24
3-19	Bonding of Connector to Mounting Surface	3-24
3-20	Method of Making Permanent Seam Using a Gasket	3-29

LIST OF FIGURES (Continued)

Figure		Page
3-21	Mounting of Gasket on Hinged Side of Equipment Doors and Panels	3-29
3-22	Illustration of Proper and Improper Shield Penetrations.	3-31
3-23	Use of Cylindrical Waveguide - Below-Cutoff for Control Shaft Shield Penetration	3-32
3-24	Method of Mounting Wire Screen Over a Large Aperture	3-33
3-25	Acceptable Methods of Shielding Panel - Mounted Meters.	3-33
3-26	Grounding Practices for Single-Ended Amplifiers	3-36
3-27	Grounding Practices for Differential Amplifiers.	3-36
3-28	Method of Grounding Bridge Transducers	3-37
3-29	Use of Isolated Differential Amplifier With Balanced Bridge Transducer	3-37
3-30	Recommended Grounding Practices for Floating Transducers	3-39
3-31	Grounding for Single Channel Strip Chart Recorder	3-41
3-32	Resistive Isolation of Data Channels.	3-41
3-33	Single Ground Terminal Isolation Resistance Test for an Individual Equipment	3-45
3-34	Signal Ground Terminal Isolation Resistance Test for an Equipment Assembly	3-46
3-35	Measurement of Connector Bonding Resistance	3-48

LIST OF TABLES

Table		Page
1-1	Relative Advantages and Disadvantages of the Principal Types of Earth Electrodes	1-8
1-2	Minimum Requirements for Roof and Down Conductors on Structures Not Greater than 75 Feet (23 Meters) in Height.	1-34
1-3	Minimum Requirements for Roof and Down Conductors on Structures Greater than 75 Feet (23 Meters) in Height.	1-34
1-4	Solid Copper Wire - Weight, Breaking Strength, DC Resistance	1-35
1-5	Frequency of Transient Occurrences.	1-51
1-6	Parameter for Direct Lightning Strike Current	1-54
1-7	Peak Currents from Direct Lightning Strikes	1-55
1-8	Transient Surge Amplitudes	1-55
1-9	Transient Occurrence, High-Incident Lightning Areas	1-63
1-10	Transient Occurrence, Low-Incident Lightning Areas.	1-63
1-11	Generalized Characteristics for Surge Arresters by Type	1-65
1-12	Typical Maximum Clamp Voltage for Gap Arresters	1-68
1-13	ZNR Type Devices (Molded Case Type) Typical Characteristics	1-70
1-14	High Energy ZNR Surge Arrester Typical Characteristics.	1-70
1-15	Test Results for Parallel-Connected ZNR	1-71
1-16	Transients Projected to Occur on Externally Exposed Line in High-Lightning Incident Area Over 10-Year Period	1-73
1-17	Transient Surges, Line-to-Ground.	1-81
1-18	Transient Surges, Line-to-Line	1-82
1-19	Transient Surges Projected to Occur in 10-Year Period on Externally-Exposed Landlines	1-83
1-20	Grounding Electrode Conductor Size.	1-107
1-21	Equipment Grounding Conductor Size Requirement	1-110
1-22	Size of Equipment Ground Cables	1-119
1-23	Minimum Torque Requirements for Bolted Bonds	1-141
1-24	Compatible Groups of Common Metals.	1-143
1-25	Bond Protection Requirements	1-144
1-26	Protective Finishes for Bond Members	1-145
1-27	Metal Connections for Aluminum and Copper Jumpers	1-147
1-28	Attenuation Correction Factors for Reinforcing Steel	1-157
1-29	Relative Conductivity and Relative Permeability of Common Metals.	1-163
1-30	Soil Resisitivity (Ohm-m)	1-179
3-1	Frequency Properties of Standard Sizes of Honeycomb	3-30

CHAPTER 1

NEW FACILITIES DESIGN CRITERIA

1.1 INTRODUCTION.

This chapter presents the design, installation practices, test and acceptance procedures associated with the incorporation of effective grounding, bonding, and shielding for a new facility.* The major elements of the facility covered are the (1) earth electrode subsystem, (2) fault protection subsystem, (3) lightning protection subsystem, (4) signal reference subsystem, (5) bonding, and (6) shielding. Design and construction steps for these six elements are contained in the following sections:

1.2 Earth Electrode Subsystem
1.3 Lightning Protection for Structures
1.4 Fault Protection Subsystem
1.5 Signal Reference Subsystem for New Facilities
1.6 Grounding, Philosophy for Equipments Processing National Security Related Information
1.7 Bonding Practices
1.8 Shielding
1.9 Common-Mode Noise and Instrumentation
1.10 EMP Protection
1.11 Military Mobile Facilities
1.12 Fences
1.13 Inspection and Test Procedures for a New Facility

Secure transmission facility requirements are covered in Section 1.6. Supplemental measures which are needed to be incorporated in a facility to help reduce common-mode and instrumentation noise problems are presented in Section 1.9, Common-Mode Noise and Instrumentation. The special construction practices recommended to reduce facility vulnerability to the electromagnetic pulse (EMP) threat are contained in Section 1.10, EMP Protection. Tactical grounding requirements are presented in Section 1.11, Military Mobile Facilities. Inspection and Test Procedures for a New Facility, provided in Section 1.13, should be utilized in verifying that recommended practices and procedures are properly implemented and to help establish a performance baseline against which future measurements can be compared.

To obtain optimum performance of electronic equipment and personnel safety while providing adequate protection against power system faults, EMP, and lightning strikes, thorough consideration must be given to the grounding system for the building; to the bonds needed and the method of their implementation; and to the shielding needed throughout the building for personnel safety and equipment interference control. For a new facility, the requirements in each of these areas are defined and appropriate design steps set forth to assure that the necessary measures are incorporated into the final structure and equipment installation.

---

*A new facility is considered to be one of new construction or an existing one that will undergo major renovation or major equipment reconfiguration. The project engineer shall determine the grounding requirements whenever minor equipment reconfigurations are accomplished in existing facilities. Refer to Chapter 2 for additional information.

1.2 EARTH ELECTRODE SUBSYSTEM. The earth electrode subsystem establishes the electrical connection between the facility and earth. This connection is necessary for lightning protection, useful in power fault protection, and aids in the minimization of noise. The system should be tailored to reflect the characteristics of the site and the requirements of the facility.* It must be properly installed and steps must be taken to assure that it continues to provide a low resistance connection throughout the life of the structure. To achieve these objectives, first determine the electrical and physical properties of the site, design an earth electrode subsystem appropriate for the site, install the subsystem in accordance with the recommended procedures, and finally, measure the earth resistance of the subsystem to verify that it meets the recommended goals or design specifications.

1.2.1 Determination of Site Parameters (Site Survey). Before beginning the design, conduct a survey of the site where the earth electrode subsystem is to be installed. Through this survey, determine the resistivity of the soil, identify significant geological features, gather information on architectural and landscape features which may influence the design of the subsystem, and review local climate effects. (If possible, conduct this survey in advance of the final site selection in order to avoid particularly troublesome locations.)

1.2.1.1 Soil Resistivity. As the first step of the site survey, measure the resistivity of the soil at several points over the area of the planned facility. For even the smallest facility, the effective facility area in so far as the electrode subsystem is concerned is assumed to be at least 15 meters by 15 meters (50 feet by 50 feet). For larger facilities, the facility areas are assumed to extend at least 6 meters (20 feet) beyond the basic building or structural outline, i.e., the ground floor plan, substation grid, tower footing, transformer housing, etc. It is necessary that the soil resistivity be known over the area encircled or covered by the earth electrode subsystem.

a.. A single soil resistivity measurement is made using the four-probe method (see Volume I, Section 2.4) in the following manner:

(1) At a location near the center of the site, insert the four short probes supplied with the earth resistance test set into the soil in a straight line as illustrated in Figure l-l. A convenient probe spacing of 6 to 9 meters (20 to 30 feet) is recommended as a start. If probes are not supplied with the test set or if they have been lost or misplaced, four metal (steel, copper, or aluminum) rods, 1/4 to 3/8 inch in diameter and 12 to 18 inches in length, may be used. Drill and tap No. 6-32, 8-32, or 10-24 screws, according to rod size and securely fasten the test set leads to the rock. Clamps may also be used for connecting the leads to the probes.

---

*The relationship between the performance of an electronic system and the resistance of the earth ground is unclear. The value of 10 ohms earth electrode resistance recommended in Section 1.2.2.1a represents a carefully considered compromise between overall fault and lightning protection requirements and the estimated relative cost of achieving the resistance in typical situations. In locations characterized by high soil resistivities, to achieve 10 ohms could be very expensive, In such locations, examine all elements of the site, consider the requirements of the planned facility, and then choose the best compromise based on soil conditions, relative costs, etc.

(2) Following the manufacturer's instruction, obtain a resistance reading, R, with the test set.

(3) Convert the probe spacing, A, to centimeters. (See Page xvi for metric conversion factors.)

(4) Compute resistivity from

$$\rho = 6.26AR \quad \text{(in ohm-cm)} \tag{1-1}$$

EXAMPLE: Assume that a resistance of 2 ohms is measured with probe spacings of 20 feet.

Convert 20 feet to centimeters: 20 ft x 30.5 cm/ft = 610 cm

Calculate resistivity: ρ = 6.25 x 610 x 2 = 7662 ohm -cm

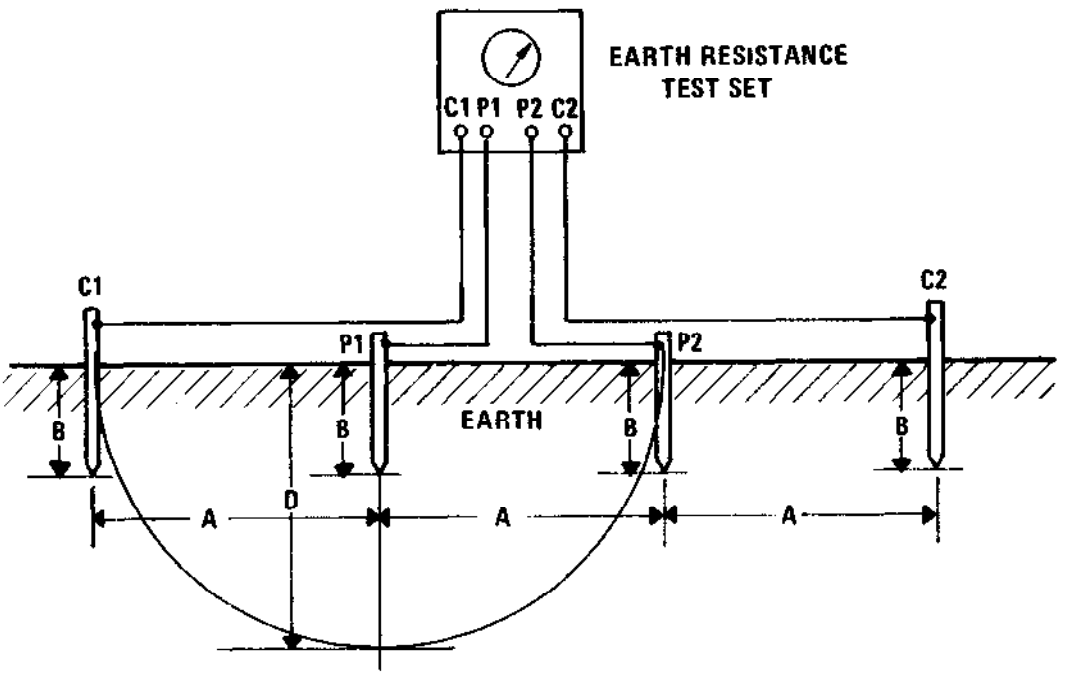

A = ELECTRODE SPACING
B = DEPTH OF PENETRATION < A/20
D = DEPTH AT WHICH RESISTIVITY IS DETERMINED = A

Figure 1-1. Measurement of Soil Resistivity

b. The reading obtained indicates the average resistivity of the soil in the immediate vicinity of the test area. A resistivity profile of the site requires that the above procedure be repeated at many sample locations over the region being mapped. For small sites up to 2500 square feet (232 square meters), make at least one measurement at the center of the site and at each of the four corners of a 50-foot square as shown in Figure l-2. Drive a stake or marker at the locations shown. Position the potential and current probes in a straight line with the stake or marker centered between the probes. Make a resistance measurement at each location and calculate the resistivity as in step a-4 above. Take the average of the five readings as the resistivity for the soil at the site. If possible, soil measurements should be made during average/normal weather conditions. Measurements should never be made immediately after a rain or storm.

c. For larger sites, make measurements every 100 to 150 feet (30 to 45 meters) over the site area. Include in the site area the locations of support elements such as transformer banks, towers, engine-generator buildings, etc. Choose a sufficient number of test points to give an indication of the relative uniformity of the soil composition throughout the area. Be particularly alert for the presence of localized areas of very high or very low resistivity soils.

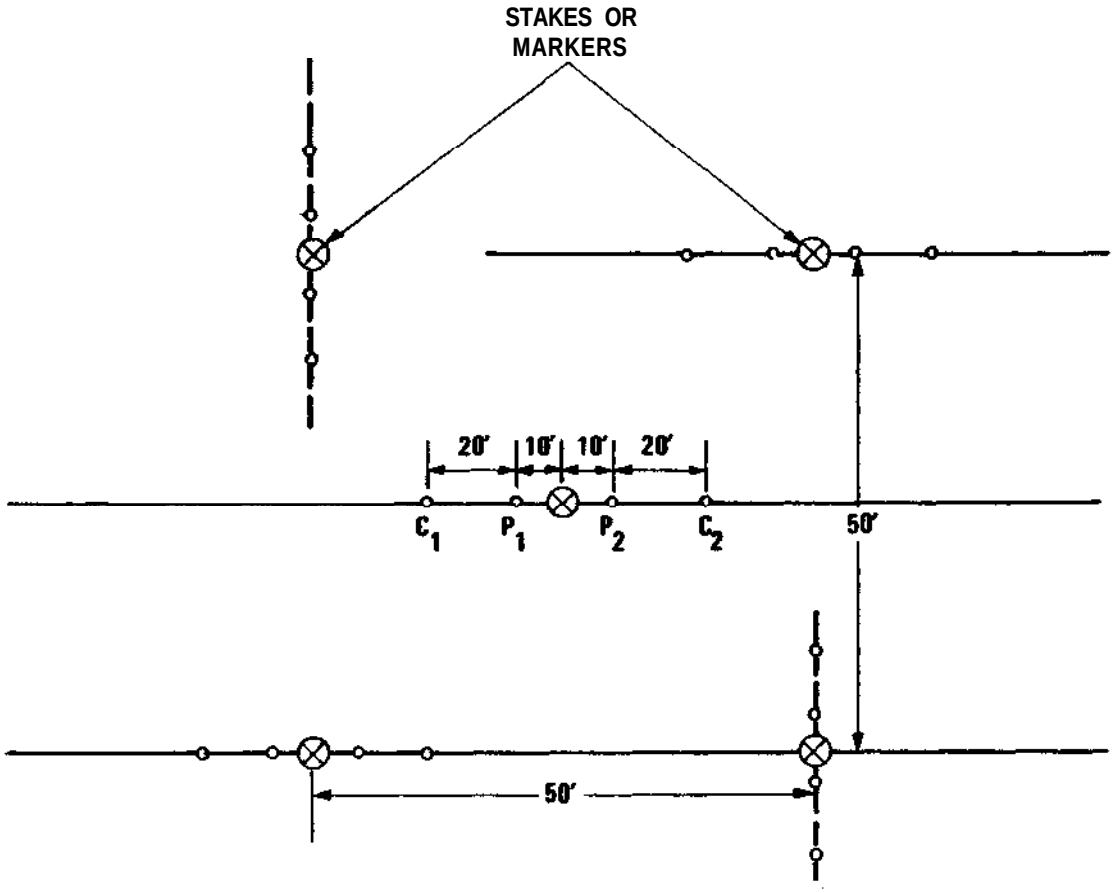

NOTE: NOT DRAWN TO SCALE.

Figure 1-2. Resistivity Determination of a Small Site

1.2.1.2 Geological Effects.

a. Identify the significant geological features of the site. Specifically, attempt to establish:

(1) the distribution of major soil types (see Volume 1, Section 2.3.2) to include the locations of sand and gravel deposits,

(2) major rock formations,

(3) the presence of water sources to include underground streams, and

(4) the depth of the water table.

Utilize test borings, on site inspections, studies of local maps, and interviews with local construction companies, well drillers, and other local personnel to obtain the desired information.

b. Evaluate the information provided by these sources for indications of particularly troublesome (or particularly helpful) characteristics that may influence the design or installation of the earth electrode subsystem of the facility.

1.2.1.3 Physical Features. Locate and identify those other physical features that will influence the general placement of the earth electrode subsystem, the location of test and access points, physical protection requirements, and the cost of materials and installation. For example, indicate on the general site plan :

a. the planned physical layout of the building or structure,

b. locations of paved roads and parking lots,

c. drainage, both natural and man-made, and

d. the location of buried metal objects such as pipes and tanks.

1.2.1.4 Local Climate.

a. Review local climatic conditions and determine the annual amount and seasonal distribution of rainfall, the relative incidence of lightning, and the depth of freezing (frost line) typical of the area. Obtain the rainfall and frost line information from the local weather service; project the relative lightning incidence from the isokeraunic maps given in Volume I, Section 3.4, Figures 3-2 and 3-3.

b. Record the data and make it a part of the facility files for the site. Immediately, however, use this information to aid in the design of the earth electrode subsystem for the facility to be constructed at the site.

1.2.2 Design Procedure.

1.2.2.1 Selection of Electrode Configuration. Determine what type of earth electrode subsystem is most appropriate for the facility (complex, building, structure, transformer bank, substation, etc). The directed configuration is a ring ground outlined in paragraph 5.1.1.1.3 of MIL-STD-188-124A. If this configuration cannot be employed, alternate configurations meeting these requirements are described in Section 1.2.2.3 of this volume.

a. Establish the primary functional requirements to be met by the earth electrode subsystem. For example:

Lightning. For a facility located in an area of high lightning incidence or a high degree of exposure to lightning, or both, (see Volume I, Section 3.4) the earth electrode subsystem must safely dissipate the lightning energy without melting conductors or overheating the soil (see Volume I, Section 2.8.2.2). Also, the subsystem must minimize step voltages in areas where personnel are present.

Impulse Properties and RF Impedance Characteristics. If the antenna counterpoise must serve as an earth electrode subsystem, it must have low rf impedance properties.

Mobility. Mobile facilities or temporary transportable facilities will generally not justify the installation of an extensive fixed electrode subsystem. For such facilities, install only a basic system capable of providing the minimum acceptable lightning and personnel fault protection (see Section 1.11).

Resistance. At fixed C-E facilities, the earth electrode subsystem should exhibit a resistance to earth of 10 ohms or less. If 10 ohms is not economically feasible by the ring ground, alternate methods should be considered. Paragraph 5.1.1.1.3.2 of MIL-STD-188-124A refers. Resistance measurements using the fall-of-potential method shall be accomplished in 3-month increments for 12 months following installation. Measurements shall be conducted in al-month intervals after the first year.

b. Evaluate local conditions.

Soil resistivity. Is soil resistivity low (< 5000 ohm-cm), average (5000 to 20,000 ohm -cm), or high (> 20,000 ohm-cm)? The higher the soil resistivity, the more complex (and expensive) will be the electrode subsystem necessary to achieve 10 ohms resistance.

Moisture content. Is the water table near the surface or far below grade, and is it subject to large seasonal variations? Design the earth electrode subsystem so that it makes and maintains contact with soil that stays damp or moist year round if at all possible. Penetration of the permanent water table is highly desirable.

Frost line. How deeply does the frost line extend, even during coldest periods? The resistivity of soil rises greatly (see Volume I, Section 2.3.3) as the soil temperature drops below 32° F. Thus for maximum stability of electrode resistance, the subsystem should penetrate far enough into the soil so that contact is always maintained with unfrozen soil. The earthing techniques described in this chapter are not directly applicable to permafrost. In permafrost, fault protection must be provided through the use of metallic returns accompanying the power conductors to insure the existence of a return path to the transformer or generator.

Personnel protection in permafrost requires an even greater emphasis on the bonding of all metal objects subject to human contact and to the power system neutral and is described in Volume I, Chapter 2. Because of the high resistance of permafrost, stray earth currents can be expected to be minimal with consequently reduced concern with inter-facility power frequency noise problems (see Volume I, Section 2.1.3). In the event that earth-current related noise problems exist, the common-mode rejection techniques described in Volume I, Section 6.4 should be applied.

Rock Formations. Are major rock formations near the surface and are they large enough to influence the design and layout of the earth electrode subsystem? In regions of shallow bedrock, vertical ground rods may not be usable and horizontal grids, wires, or plates must be used. Large rock outcroppings or subsurface boulders may force the alternate routing of conductors or the placement of rods. There is no need to incur the expense of drilling holes in rock to insert rods or lay wires because the resistivity of rock is so high that generally the rods or wires would be ineffective.

Architectural layout. Design the earth electrode subsystem so that it will not be materially influenced by the weather shielding effects of parapets and overhangs. Lightning down conductor placement and routing will frequently be influenced by architectural considerations. Design the earth electrode subsystem to accommodate such considerations by providing convenient connection points near the down conductors. Route the interconnecting cable of the earth electrode subsystem near down conductors to avoid long extensions between the down conductor and the effective grounding point. Configure the earth electrode subsystem such that convenient connections are possible between the earth electrode subsystem and grounding conductors of the power and signal ground systems inside the facility.

Landscape features. Preferably locate ground subsystem conductors under sodded areas or those otherwise covered with vegetation. Locate conductors to take maximum advantage of the wetting effects of runoff or drainage water from the roof, parking lots, etc. Try to avoid placing major portions of this earth electrode subsystem under extensive paved areas such as roads and parking lots.

c. Considering the relative advantages and disadvantages given in Table 1-1, choose a basic type of electrode most appropriate for meeting the functional requirements of the facility at the site under construction.

d. Estimate the relative costs to meet the objectives with the different types of configurations. Include the cost of materials, installation costs, and relative maintenance and upgrading costs.

Table 1-1

Relative Advantages and Disadvantages of the Principal Types of Earth Electrodes

Type	Advantages	Disadvantages
Ring Ground	Straightforward design. Easy to install (particularly around an existing facility). Hardware readily available. Can be extended to reach water table.	Not useful where large rock formations are near surface.
Horizontal Bare Wires (Radials)	Can achieve low resistance where rock formations prevent use of vertical rods. Low impulse impedance. Good rf counterpoise when laid in star pattern.	Subject to resistance fluctuations with soil drying.
Horizontal Grid (Bare Wire)	Minimum surface potential gradient. Straightforward installation if done before construction. Can achieve low resistance contact in areas where rock formations prevent use of vertical rods. Can be combined with vertical rods to stabilize resistance fluctuations.	Subject to resistance fluctuations with soil drying if vertical rods not used.
Vertical Rods	Straightforward design. Easiest to install (particularly around an existing facility). Hardware readily available. Can be extended to reach water table.	High impulse impedance. Not useful where large rock formations are near surface. Step voltage on earth surface can be excessive under high fault currents or during direct lightning strike.
Plates	Can achieve low resistance contact in limited area.	Most difficult to install.
Incidental Electrodes (Utility pipes, building foundations, buried tanks)	Can exhibit very low resistance.	Little or no control over future alterations. Must be employed with other made electrodes.

1.2.2.2 Calculation of Earth Resistance.

Once the most appropriate configuration is chosen for the facility, calculate the resistance to earth for the configuration. If the calculated resistance meets the design goal (or requirement), complete the design to include all necessary interconnections. To illustrate this design procedure, assume that a 100 ft x 160 ft rectangular configuration like that shown in Figure 1-3 is initially chosen. Further, assume that the soil resistivity measurements made during the site survey showed an average resistivity of 10,000 ohm-cm for the area. In addition, the site survey indicated that all rock formations are at depths greater than 10 feet; the water table never drops more than 5 feet below grade; and the frost line extends only to 1 foot below grade. Therefore, 10-foot ground rods are initially selected for evaluation. (The minimum rod diameter required in MIL-STD-188-124A, para 5.1.1.1.4 is 3/4 inch.)

a. Determine the resistance of one of the ground rods from Figure 1-4. First, place a straight edge between the point marked 3/4 on line “d” and the point marked 10 on line "ℓ". Indicate on line “q” where the straightedge crosses. Next, place the straightedge between the point just marked on “q” and the 10,000 ohm-cm point on the vertical line labeled “Resistivity.” Read the resistance as 32 ohms at the point where the straightedge crosses the vertical line labeled “Resistance.”

b. Assume an initial spacing of 20 feet or twice the rod length (see Volume I, Section 2.6.2) between rods. Figure l-3 shows that 26 rods are required to encircle the structure. Use Figure 1-5 to determine the relative lowering of the resistance of one rod that is produced by 26 rods in parallel. (The answer is about 5.5 percent.) Thus the resistance of the 26 rods in 10,000 ohm-cm soil is

$$R = 32 \times 0.055 = 1.76 \text{ ohms.}$$

Figure l-5 primarily applies to ground rods laid out in a straight line or around the perimeter of a site whose dimensions are large with respect to the rod spacing. If the rods are distributed in a grid pattern, as will frequently be done for substations, use Figure 1-6 to estimate the net resistance. In many instances, the answers provided by Figures 1-5 and 1-6 will agree. For this example, the resistance multiplier given by Figure 1-6 for 26 rods over an estimated area of 16,000 square feet (100’ x 160’) is 0.056 for a net resistance of 1.9 ohms.

1.2.2.3 Alternate Configurations. Nonideal sites will frequently be encountered. For example, large rock formations may be present which prevent the uniform placement of ground rods around the site; bed rock may be relatively near the surface; the water level may drop to several feet below grade; the soil resistivity may be very high; or architectural and landscape requirements may preclude locating ground rods at particular points. In such cases, modify the electrode configuration to conform to the constraints while achieving the desired resistance. Typical suggested alternatives are:

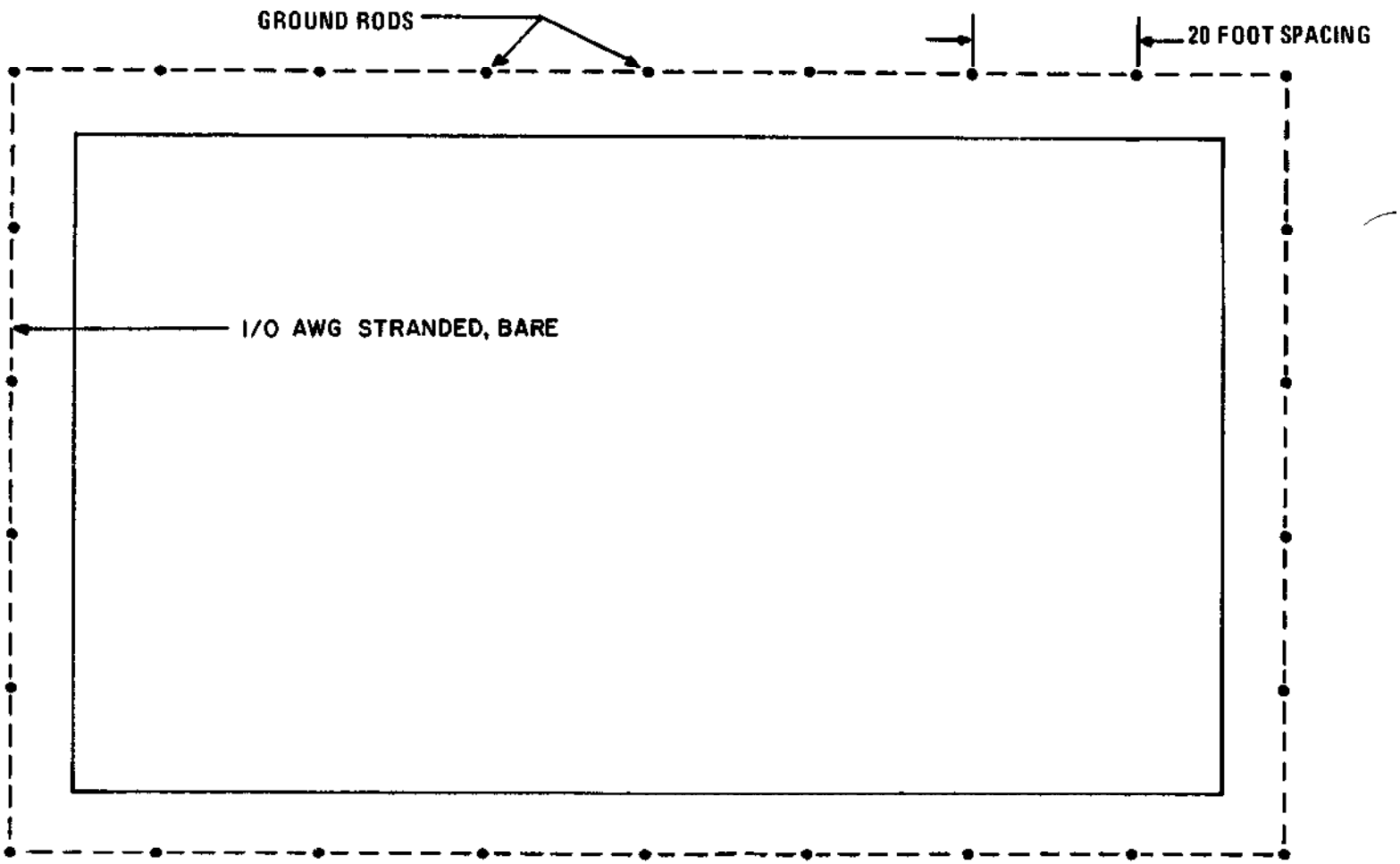

Figure l-3. Minimum Earth Electrode Subsystem Configuration for Rectangular Shaped Facility

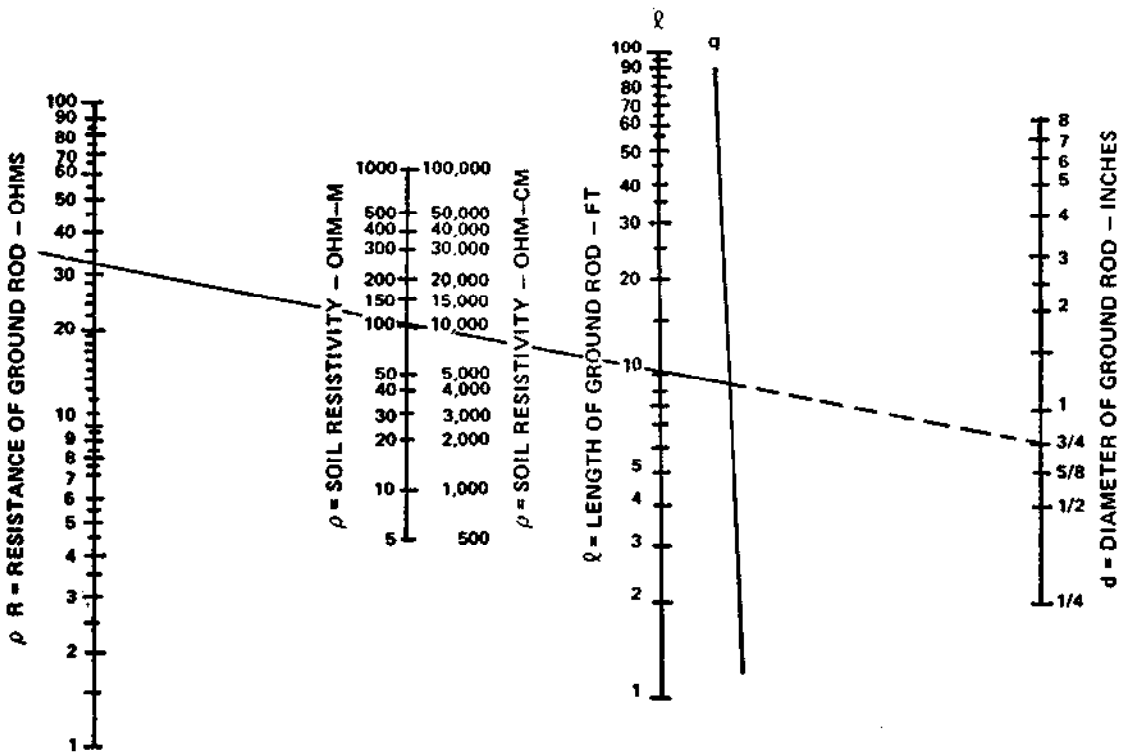

Figure 1-4. Nomograph for Determining the Resistance to Earth of a Single Ground Rod (1-1)

a. Change number of ground rods. The above example shows that fewer rods could be used and still meet the 10-ohm goal. Thus, if rock outcroppings were present at certain points around the perimeter, it would be permissible to omit some of the rods. Since 10 ohms (the net effective resistance desired) is 31 percent of 32 ohms (the resistance of one lo-foot rod in soil of 10,000 ohm-cm), Figure 1-5 shows that as few as 3 rods would be acceptable. On the other hand, if the soil resistivity is very high more rods will be necessary.

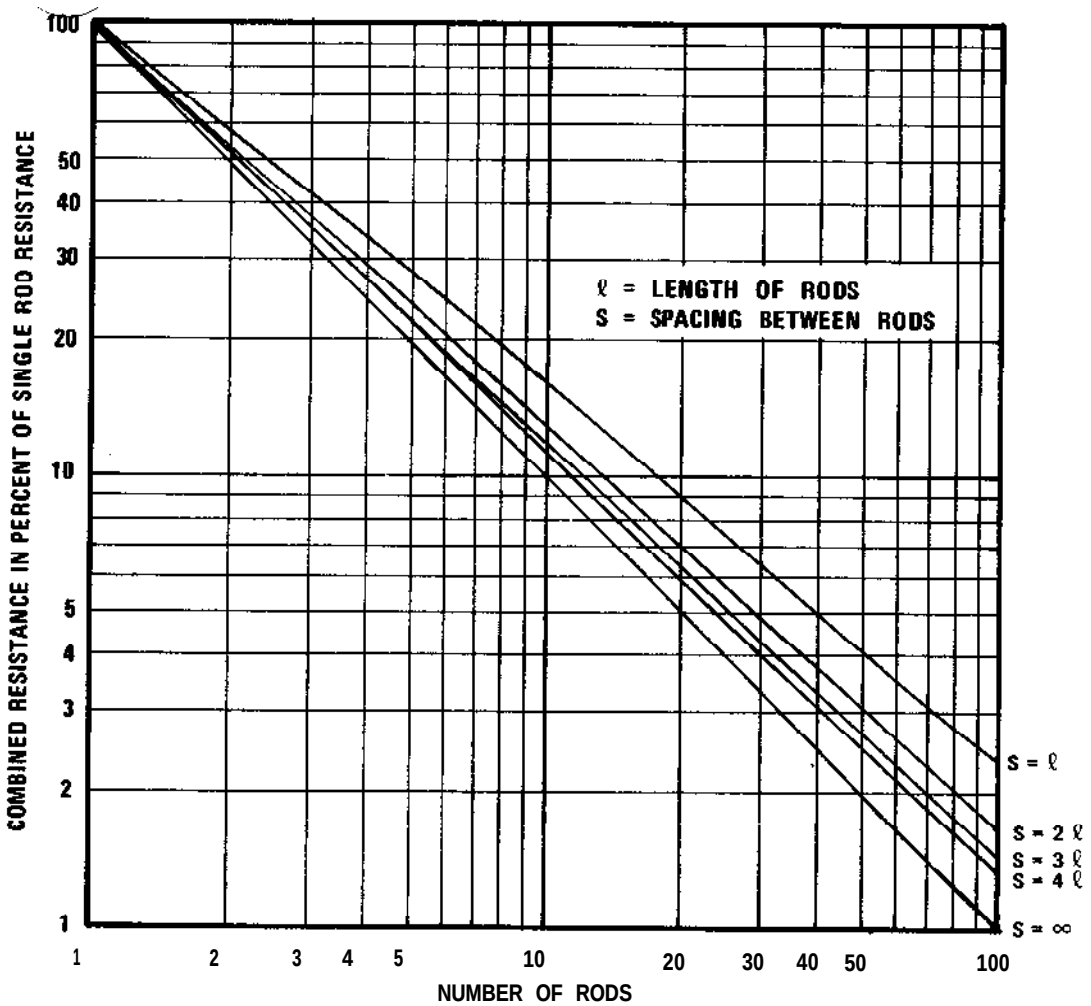

Figure 1-5. Effective Resistance of Ground Rods When Arranged in a Straight Line or a Large Circle

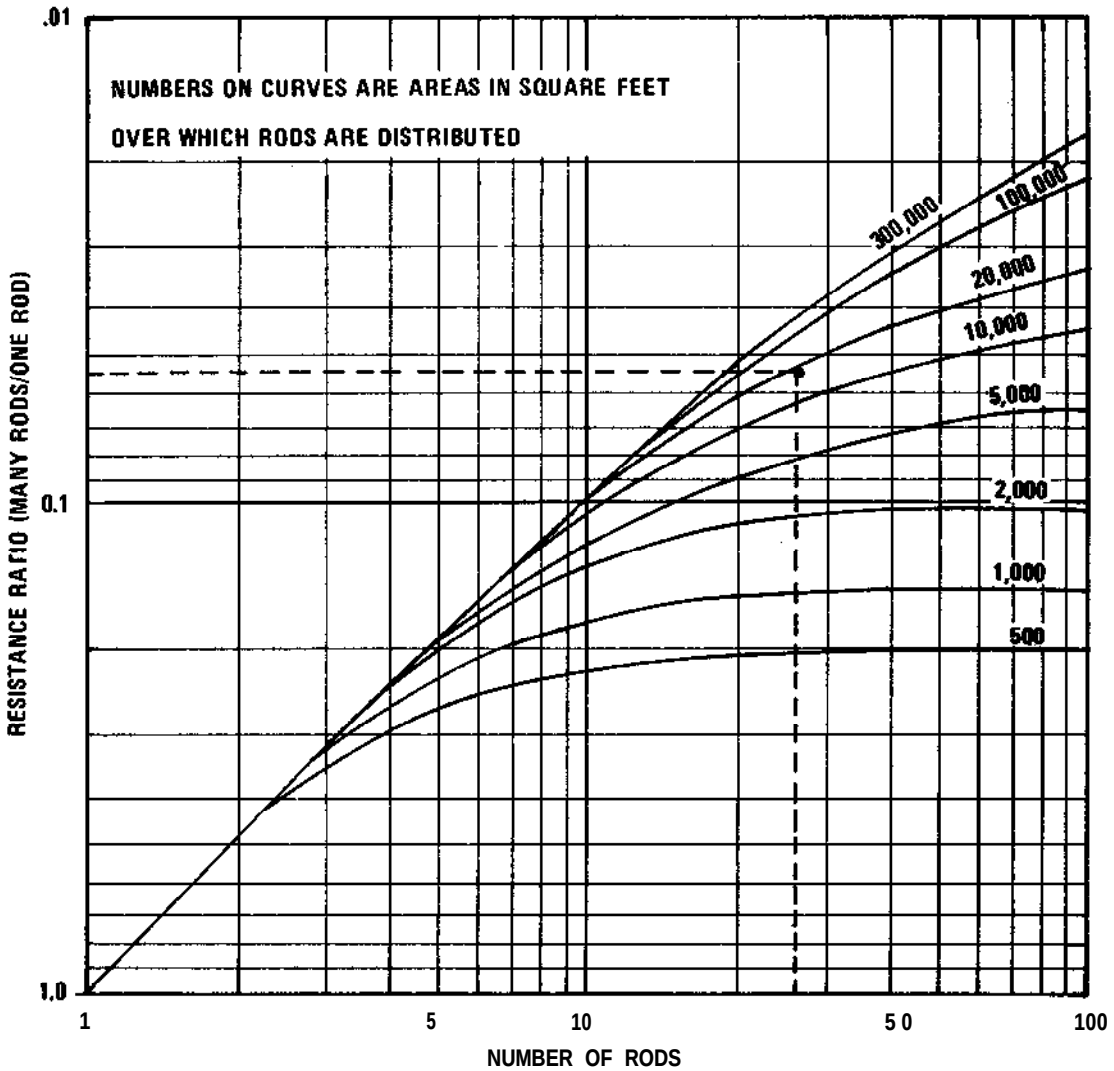

Figure 1-6. Graph of Multiple-Rod Resistance Ratio (1-2)

b. Use longer ground rods. Rods longer than 10 feet (can be realized by assembling lo-foot sections) may be used in high resistivity soil in place of a larger number of lo-foot rock. Where the ground water table is greater than 10 feet below the surface at any season of the year or where the frost line is greater than 10 feet, use the longer rods to maintain contact with the permanently moist, unfrozen soil. Use Figure 1-4 to estimate the length needed, given the soil resistivity.

c. Use horizontal wires or grids instead of vertical rods. Where bedrock or other obstacles prevent the effective use of vertical rods, horizontal wires, grids, or radials should be used. (See Volume I, Section 2.6.1.2 for design data and equations.)

d. Lower the soil resistivity through chemical enhancement (salting). Where the above alternatives are not possible or are not cost effective, chemical enhancement is frequently the only choice left. Consult Volume I, Section 2.9 before deciding what to do in this regard.

1.2.3 Design Guidelines.

a. At each facility supplied by electric power, at least one ground rod should be installed near the service disconnecting means and bonded to the earth electrode subsystem. If the transformer is located on the site, a bare 1/0 AWG wire or cable should interconnect the ground rod at the transformer with the earth electrode subsystem at the first service disconnect for lightning protection purposes.

b. For lightning protection purposes, all facilities large or small or located in areas of low or high lightning incidence will require an earth electrode subsystem, described in the previous section. Facilities having structural extensions or equipment protrusions (such as antenna elements or towers) extending above the surrounding terrain should have a continuous earth electrode subsystem enclosing each facility or should have individual earth electrode subsystems connected together. See paragraph 5.1.1.3.8.1 of MIL-STD-188-124A.

c. Most installations will require many interconnected ground rods. The configuration shown in Figure 1-3 is adequate for most facilities. (The number of ground rods actually required at a given location will be determined by the resistivity of the soil and the configuration of the installation.) Three-meter (ten-foot) ground rods installed at 20-foot intervals around the perimeter of the structure provide good utilization of the effective radius of the rod while providing several points of contact with the earth. If longer rods are required to reach the water level, to make contact with lower resistivity soils, or to penetrate below the frost line, greater spacings may be employed. The nominal spacing between rods should be between one and two times the length of the rod; however, it is necessary for a ground rod to be placed near each lightning down conductor, so spacings should be limited to not more than 50 feet in order to conform to lightning protection requirements (see Section 1.3.2.2.2).

d. The rods and interconnecting cable comprising the earth electrode subsystem should be positioned 0.6 to 1.8 meters (2 to 6 feet) outside the drip line of the building or structure to insure that rain, snow, and other precipitation wets the earth around the rods.

e. For facilities which do not conform to a rectangular or square configuration, lay out the rod field to generally follow the perimeter of the structure as illustrated in Figure 1-7.

f. Where two or more structures or facilities are located in the same general area (less than 200 feet) and are electrically interconnected with signal, control, and monitor circuits, either provide a common earth electrode subsystem, or interconnect the separate earth electrode subsystems with two buried bare cables. A common example of an installation where two separate structures are involved is a radar or communications site where the equipment shelter is adjacent to the antenna tower. Signal cables (both coaxial and waveguide), control cables, and power lines typically run between the tower and the shelter. The tower, being taller than the shelter, is more susceptible to lightning strikes. To minimize voltage differentials between the two structures, the facilities should effectively share a common earth electrode subsystem. Separate structures spaced closer than 6 meters (20 feet) should have a common earth electrode subsystem installed that encircles both facilities as shown by Figure 1-8. Figure 1-9 shows the recommended arrangement when separations equal to or greater than 6 meters (20 feet) but less than 60 meters (200 feet) are encountered. One of the interconnecting buried bare cables may also serve as a guard for buried signal or power cables. A typical site installation involving three structures separated less than 200 feet is illustrated in Figure 1-10. Structures or facilities having no interconnecting cables and separated by a distance greater than 60 meters (200 feet) generally do not require their earth electrode subsystems be interconnected.

g. There may be a number of incidental, buried, metallic structures in the vicinity of the earth electrode subsystem. These structures should be connected to the subsystem to reduce the danger of potential differences during lightning or fault protection; their connection will also reduce the resistance to the earth of the electrode subsystem. Such additions to the earth electrode subsystem should include the rebar in concrete footings, and buried tanks and pipes.

h. To minimize resistance variations caused by surface drying of the soil and by the freezing of the soil during winter and to minimize the possibility of mechanical damage to ground rods, connections, and interconnecting cables, the tops of ground rods should be at least 0.3 meters (1.0 foot) below grade level. Bury the bare 1/0 AWG interconnecting cable at least 0.45 meters (1.5 feet) below grade level. The recommended practices are Illustrated in Figure l-11.

i. If the subsystem is installed after foundations are poured, cables are installed, utility pipes installed, etc., make proper provisions for performing the needed interconnections between the water system, lightning down conductors, structural steel, buried lines and cables, and the electrodes.

j. Access to the earth electrode subsystem should be provided through the installation of one or more grounding wells at each site. Two acceptable types of grounding wells are illustrated in Figures 1-12 and 1-13. Either clay pipe or poured concrete may be used. Removable access covers must be provided. In very large structures, particularly those in which grounding grids are installed underneath, the grounding well or wells may be located inside the building in an accessible location. More than one grounding well may be necessary depending upon the size of the facility, the extent of the electrode subsystem, and the degree of accessibility to the electrodes deemed desirable. Locate at least one of the ground wells in an area with access to open soil so that resistance checks of the earth electrode subsystem can be made once the building is in use. The top view of a representative ground rod installation shown in Figure 1-14 illustrates the required connections to the signal reference subsystem, the lightning protection subsystem, and the facility ground network.

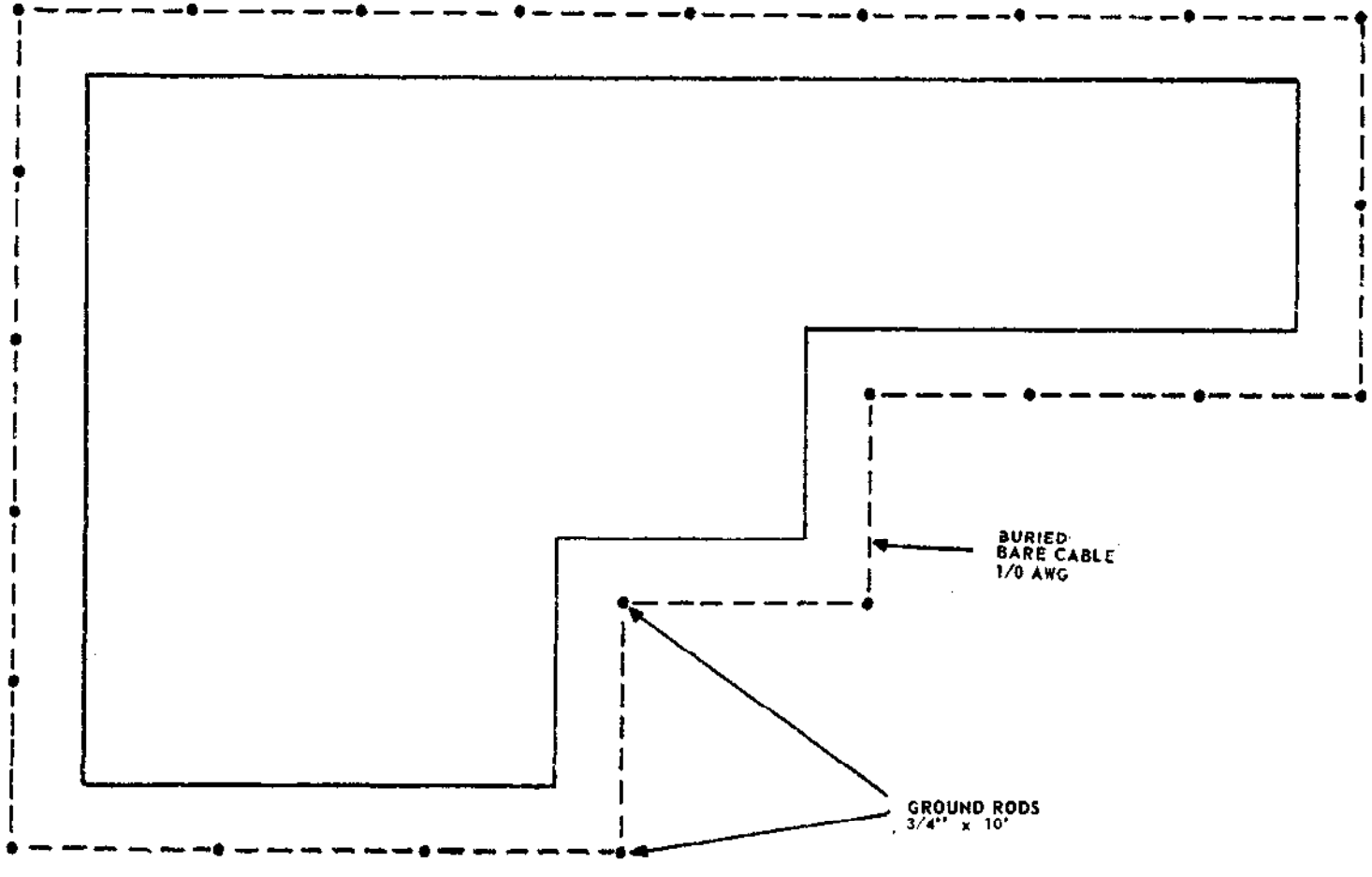

Figure 1-7. Electrode Configuration for Irregular Shaped Facility

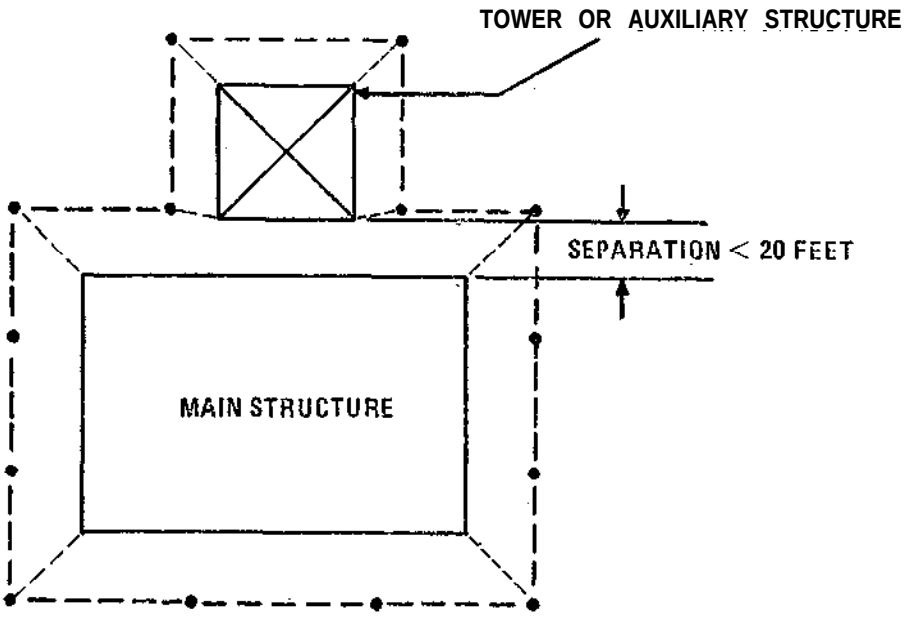

Figure 1-8. Electrode Configuration for Adjacent Structures

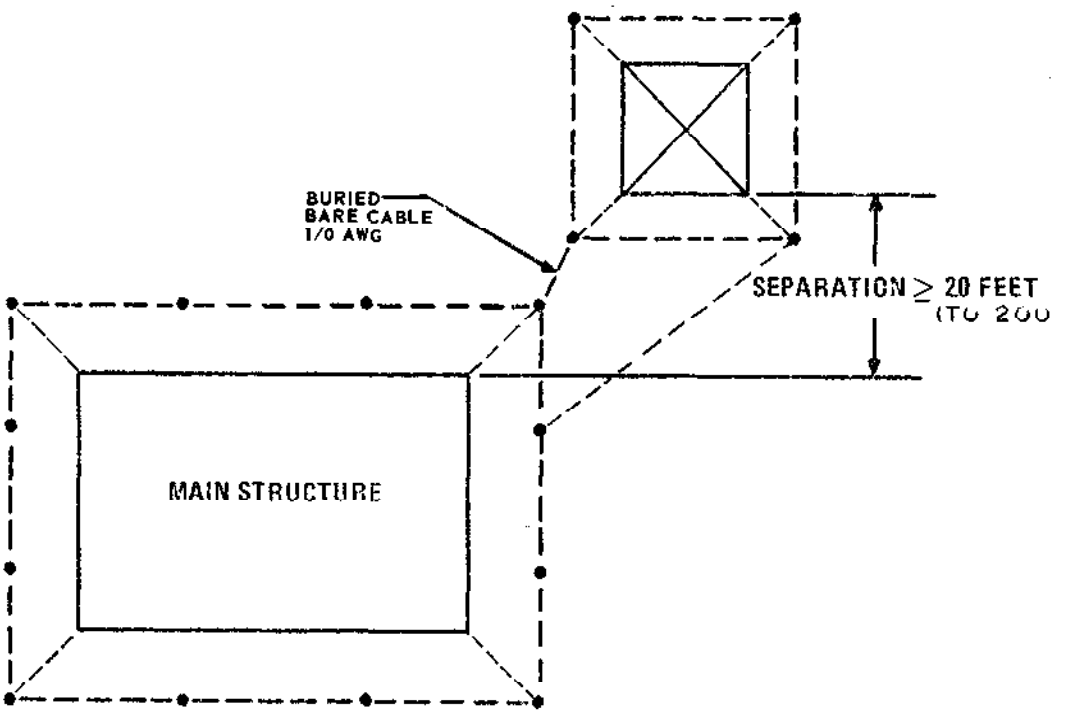

Figure l-9. Electrode Configuration for Closely Spaced Structures

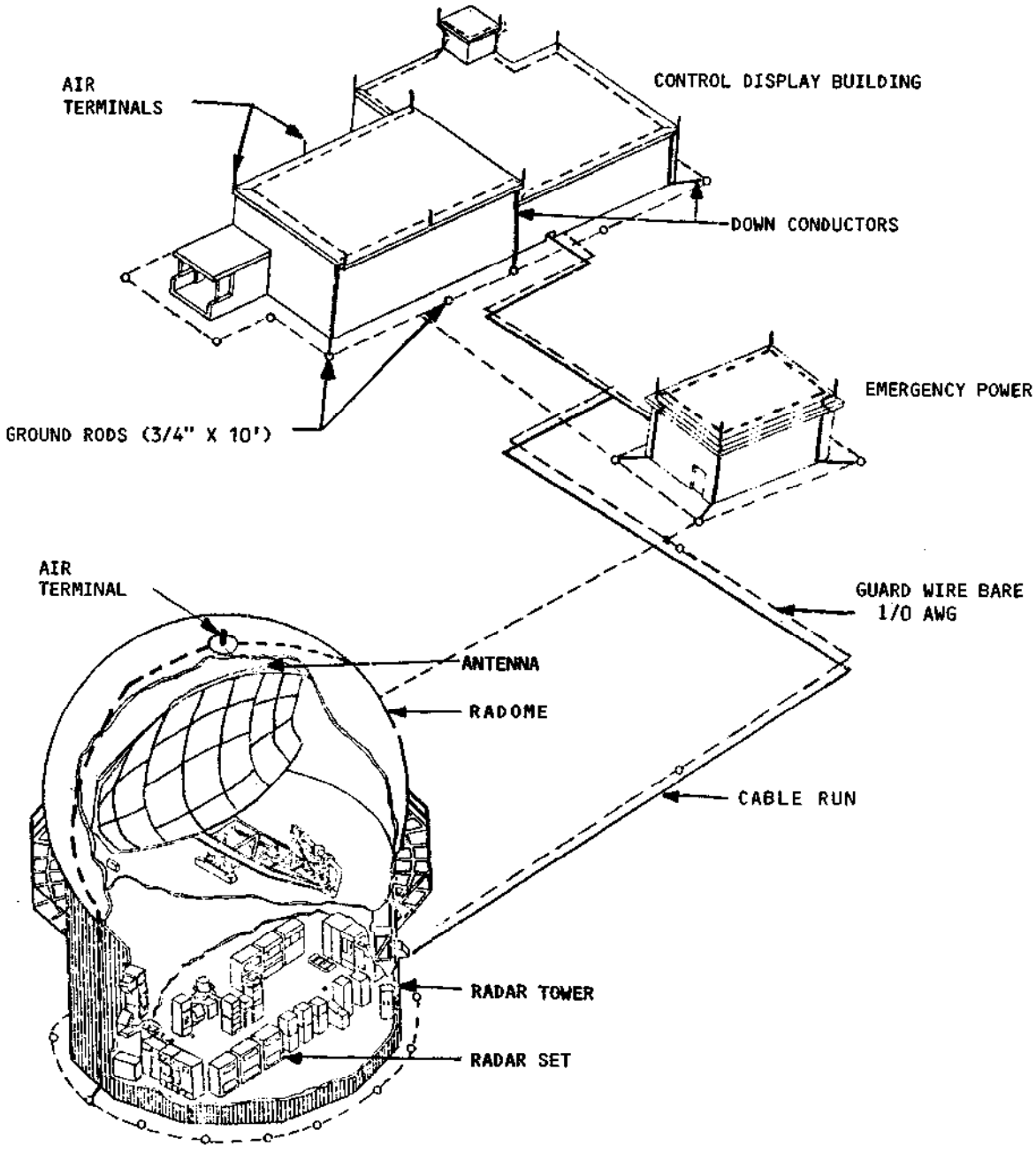

Figure 1-10. Grounding System for Typical Radar Installation

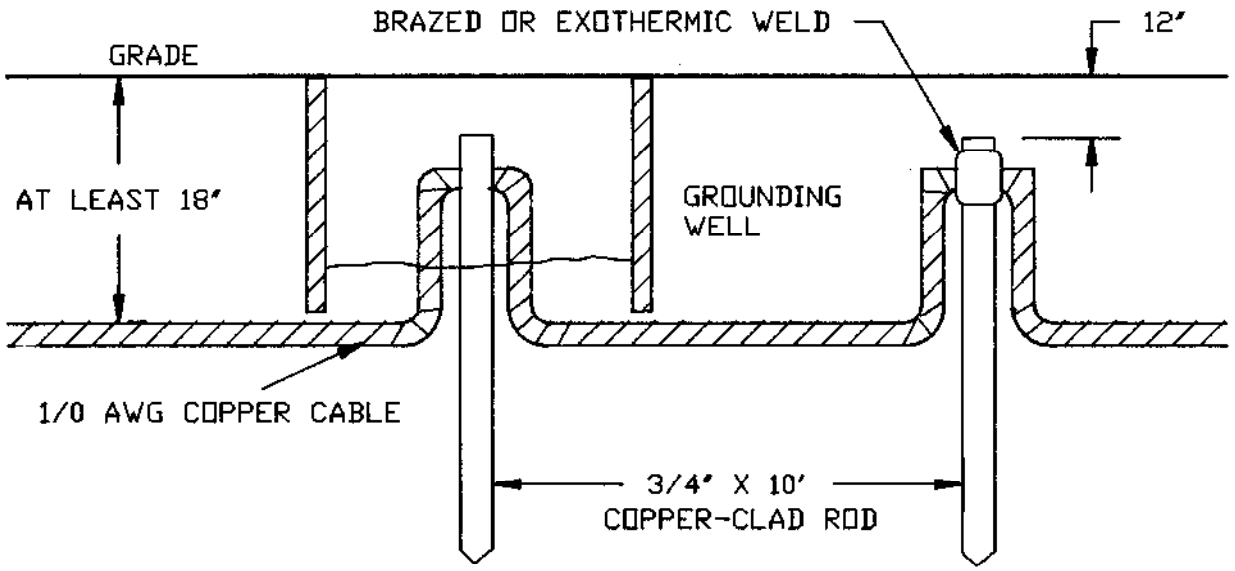

Figure 1-11. Details of Ground Rod/Earth Electrode Subsystem Installation

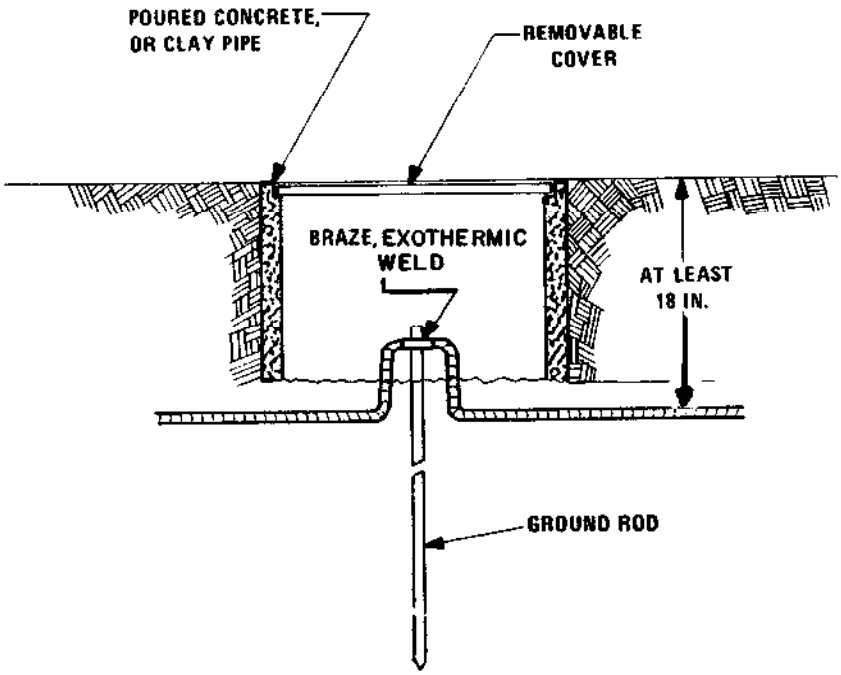

Figure 1-12. Concrete Grounding Well

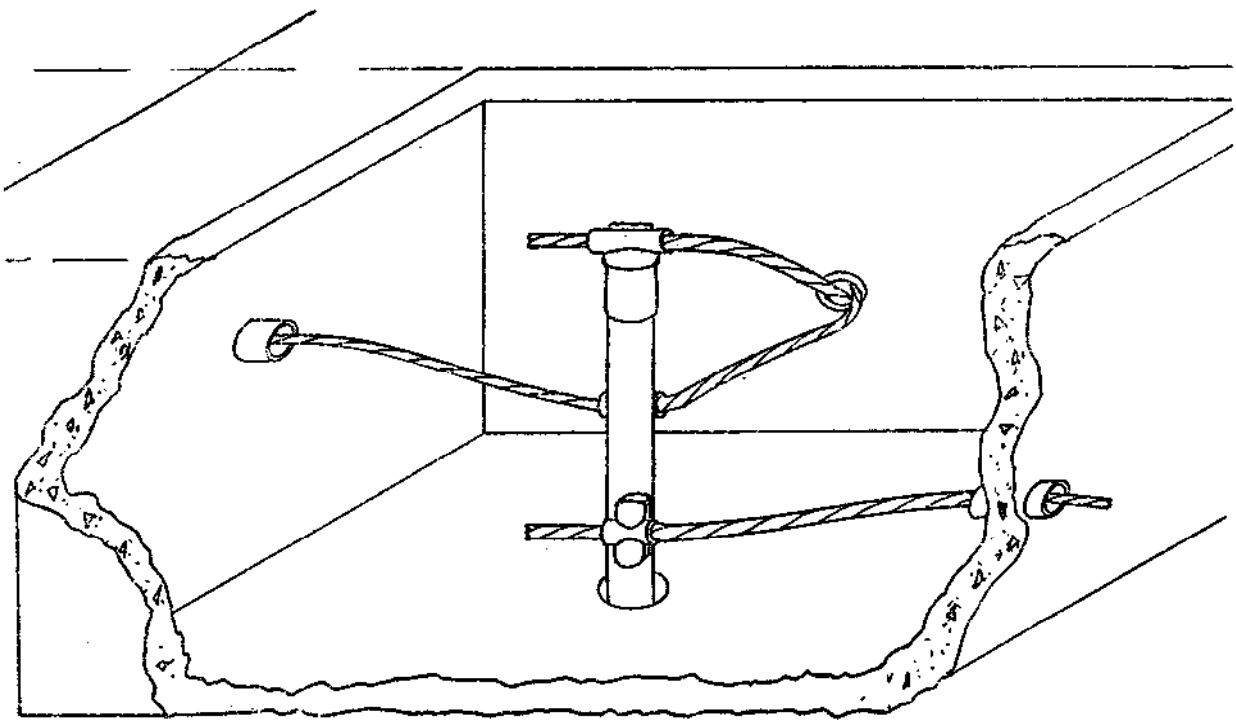

Figure 1-13. Typical Grounding Well Installation

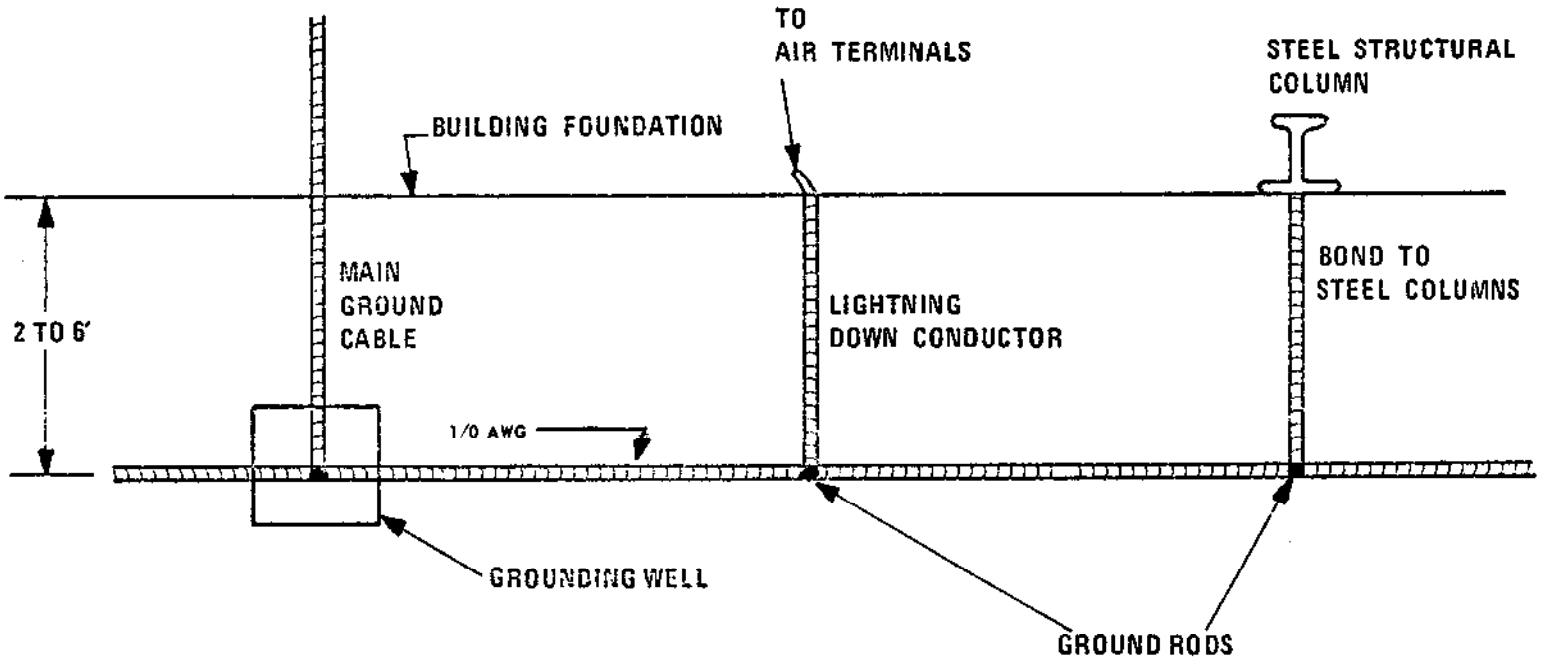

Figure 1-14. Connections to Earth Electrode Subsystem

1.2.4 Installation Practices.

a. Schedule the installation of the earth electrode subsystem so that any needed excavation, such as hole and trench digging, can be performed while other excavating, clearing, and earth moving operations associated with construction of the facility are in progress. If the subsystem is installed prior to completion of other earth moving operations, take the precautions necessary to assure that the components are not damaged or broken.

b. Take special care to ensure that all metallic lines, such as water lines, sewer lines (if metal), armored cable, etc., are carefully bonded to the earth electrode subsystem. Bonding jumpers of 1/0 AWG, or larger, bare copper wire are to be used for this purpose.

c. Before covering the earth electrode subsystem with backfill dirt or otherwise rendering it inaccessible, make visual checks of all joints and connections to check mechanical integrity, to verify the absence of voids or other indications of poor bonding, and to see that all required interconnections are made.

d. All bonds in concealed locations must be brazed or welded. Any bonds between dissimilar metals, such as between a copper wire and cast iron or steel pipe, must be thoroughly sealed against moisture to minimize corrosion. Bolted clamp connections are to be made only in manholes or in grounding wells and are to be readily accessible for verification of integrity.

e. Drive rods only into undisturbed earth or into thoroughly tamped or compacted filled areas. Rods and cables should be placed in the backfill around foundations only after the soil has been compacted or has had adequate time to settle. Do not drive or lay rods in gravel beds which have been installed for drainage purposes unless the rods extend through such beds far enough to provide at least 1.8 to 2.4 meters (6 to 8 feet) of contact with the undisturbed earth underneath. Do not lay horizontal cables in such beds under any circumstances.

f. Rods may be driven either by hand sledging, slide hammer, or with the use of power drivers. Use driving nuts to prevent damage to the driven end, particularly, if two or more sections are to be joined. Deep driven rods or those driven into hard or rocky soil generally require the use of power drivers with special driving collars to prevent damage to the rod.

g. Attach the interconnecting cable to the rods by brazing, welding, or clamping. Use bolted, clamped-type connections only if the tops of the rods are accessible through grounding wells and a periodic maintenance program is established to verify the integrity of the connection on a regular basis.

h. As rods are installed, make a one-time resistance check of each rod once it reaches its intended depth. After fulfilling the requirement of paragraph 5.1.1.1.7 of MIL STD-188-124A, resistance measurements shall be conducted on the earth electrode subsystem (as a system) at 3-month intervals for 12 months after installation and every 21 months thereafter. Use the measurement procedure outlined in Section 2.2.2.2.1.f. In this way a continuous check is made of the electrode design. If the measured resistance of the rods is less than the calculated resistance, the use of fewer rods may be acceptable as long as the minimum number required for terminating lightning down conductors is installed. On the other hand, if the measured resistance of the rods is greater than calculated, additional rods or longer rods should be installed during the construction stage rather than waiting until the facility is completed to add additional rods.

1.3 LIGHTNING PROTECTION FOR STRUCTURES.

1.3.1 Principles of Protection.

A structure, for lightning protection purposes, is defined as a building mast, tower, or similar self-supporting object other than power lines, power stations, and substations. To provide minimum protection for structures against direct lightning strikes, four requirements must be fulfilled:

a. an air terminal must be provided to intentionally attract the leader stroke,

b. a path must be established that connects this terminal to earth with such a low impedance that the discharge follows it in preference to any other,

c. a low resistance connection must be made with the earth electrode subsystem, and

d. a low impedance interface must be established between the earth electrode subsystem and earth.

These conditions are met when a lightning discharge is permitted to enter or leave the earth while passing through only conducting parts of a structure. The conditions can be satisfied by one of two methods, each having specific applications. These methods are:

a. the installation of an integral protection system consisting of air terminals interconnected with roof and down conductors to form the shortest practicable distance to ground, or

b. the installation of a separately mounted protection system of one of two types:

(1) a mast type consisting of a metal pole which acts as both air terminal and down conductor (a nonconductive pole may be used if provided with metal air terminals and down conductors connected to an earth ground), or

(2) two or more poles supporting overhead guard wires connected to an earth electrode subsystem with down leads.

1.3.2 Integral Protection System. When designing and installing an integral system of protection, perform the following steps:

a. Erect air terminals on the points of highest elevation and on other exposed areas to intercept the stroke before it has an opportunity to damage the structure or equipments or components mounted thereon. The terminal points must be placed high enough above the structure to eliminate the danger of fire from the arc.

b. Install roof and down conductors so that they offer the least possible impedance to the passage of stroke currents between the air terminals and the earth. The most direct path is the best. The radius of conductor bends shall not be less than 8 inches nor shall the angle of such bends be less than 90 degrees. Additional information may be found in para 3-12.5 of NFPA 78.

c. Distribute ground connections symmetrically about the circumference of the structure rather than grouping to one side.

d. Interconnect all metal objects close to the discharge path to prevent side flashes. (Representative interconnections are shown in Figure 1-15.)

e. Make certain that the mechanical construction of the air terminal system is strong and that the materials used offer high resistance to corrosion.

1.3.2.1 Air Terminals. Air terminals (lightning rods) must intercept, or divert to themselves, any lightning stroke that might otherwise strike the building or structure being protected. Antennas and their associated transmission lines/supporting structures shall be protected by air terminals meeting the requirements of 1.3.2.1.1.a rather than be dependent upon transient protection/suppression devices described in 1.3.3.5.22.

1.3.2.1.1 Size and Materials. To keep from exploding, igniting, or otherwise being destroyed, air terminals should be made of copper, aluminum, brass, or bronze. The minimum sizes are 1.27 cm (1/2 inch) in diameter for solid copper, brass, or bronze rods and 1.6 cm (5/8 inch) in diameter for solid aluminum rods.

a. Air terminals must extend at least 25.4 cm (10 inches) directly above the object being protected and be of sufficient height so as to provide a 1:1 zone of protection for adjacent objects (antennas and associated support/control towers, etc). Rather than choosing the shortest terminal which will provide this minimum height, all parts of the structure must be checked graphically or analytically in the manner described in the next section to deter-mine if the zone of protection provided by the terminal is adequate. Where taller terminals are required to provide complete protection, adequate support and bracing as specified by ANSI-C5.1 (2.1.15) must be provided.

b. Where air terminals are mounted on or very near (less than 1.5 meters (5 feet)) to vents or stacks which emit potentially explosive or ignitable dusts, vapors, or gases, provide additional clearance.

(1) Over hooded vents emitting explosive substances under natural draft, the air terminals should extend at least 1.5 meters (5 feet) above the opening.

(2) Above open stacks emitting explosive substances under forced drafts, air terminals should extend at least 4.5 meters (15 feet) above the opening.

1.3.2.1.2 Location.

a. Locate air terminals along the ridges of gable, gambrel, and hip roofs in the manner illustrated in Figure 1-16.

b. Place them on the corners and along the edges of gently sloping roofs as shown in Figure 1-17. Gently sloping roofs are defined as (1) having a span of 40 feet or less with a rise-to-run ratio, i.e., pitch, of one-eighth or less or (2) having a span greater than 40 feet and a rise-to-run ratio of one-quarter or less.

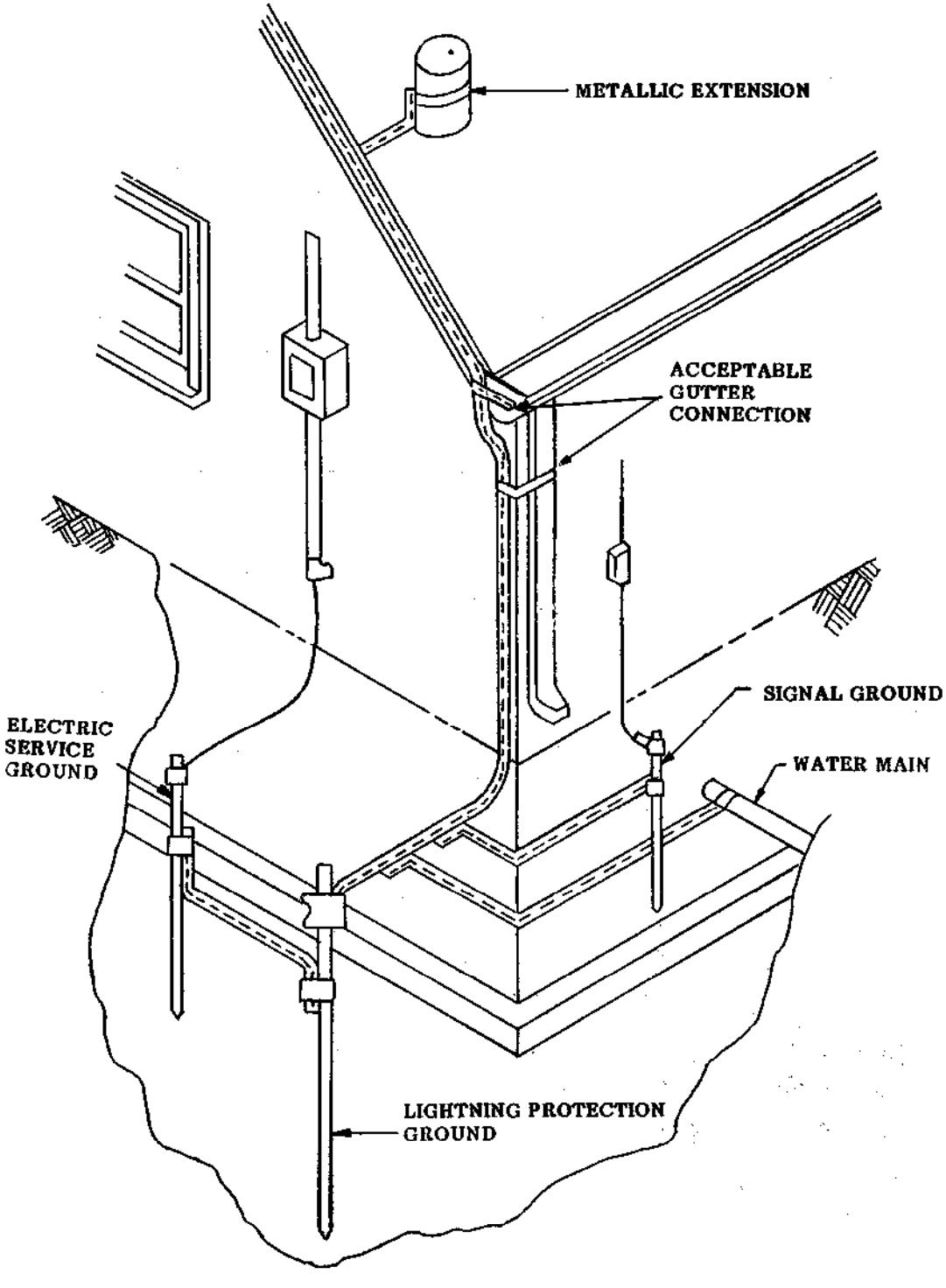

NOTE: CONNECTION TO WATER PIPE AS SHOWN

Figure 1-15. Grounding Practices for Lightning Protection

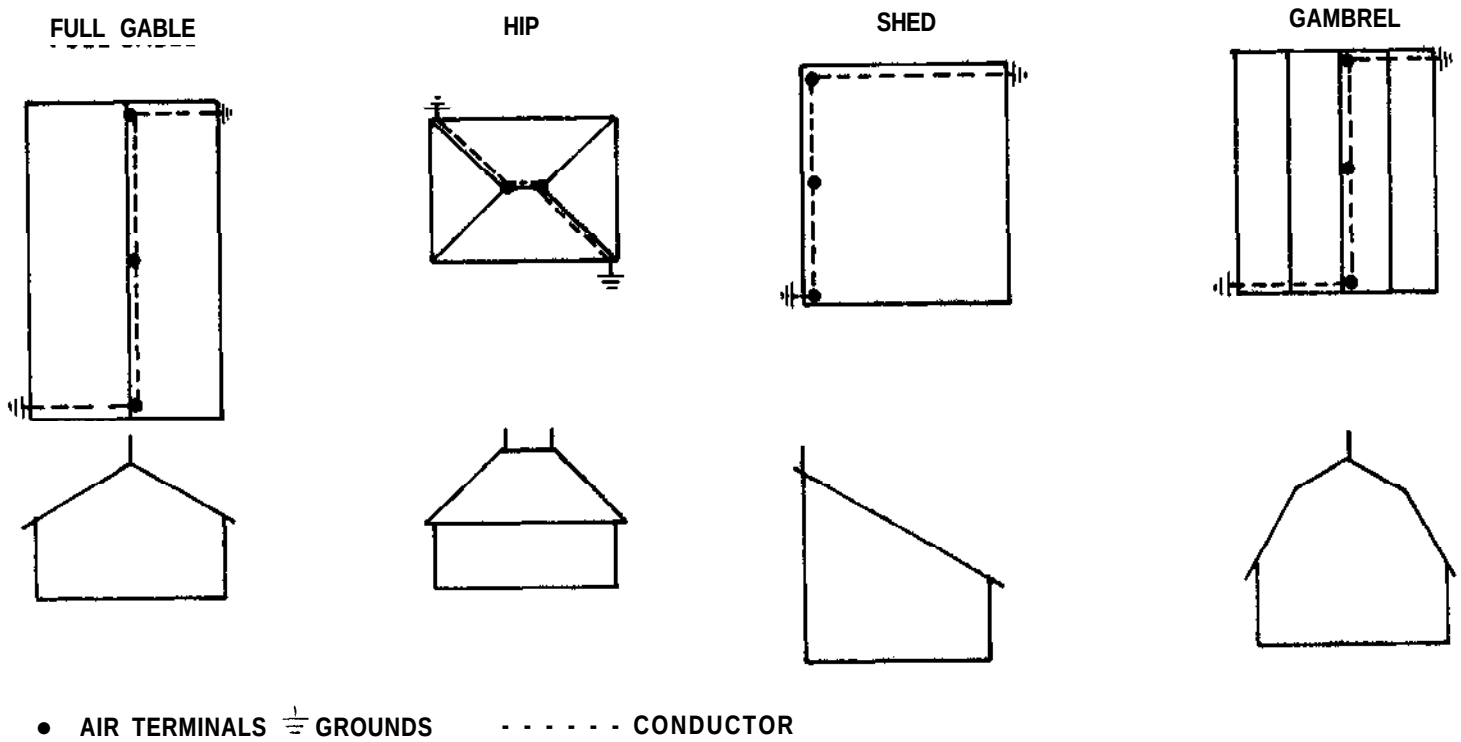

Figure 1-16. Location of Air Terminals for Common Roof Types

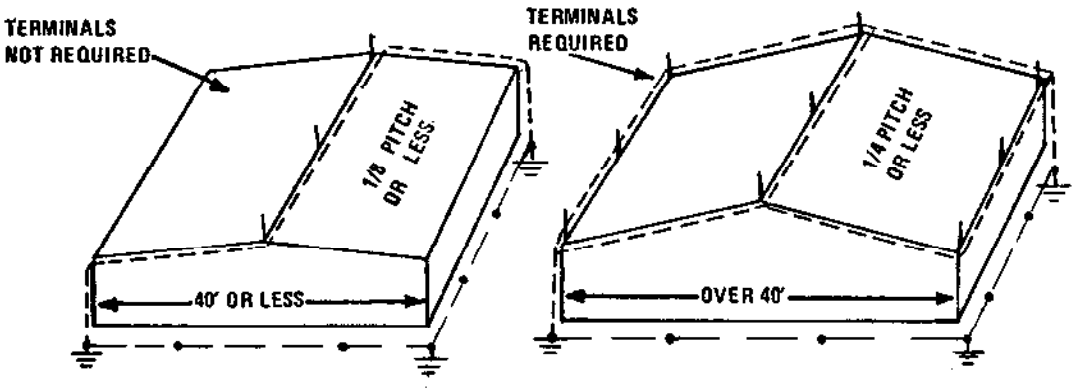

Figure 1-17. Location of Air Terminals on Gently Sloping Roofs

c. On flat roofs position the air terminals around the perimeter in the manner shown in Figure 1-18. Provide additional air terminals placed at 50-foot intervals over the interior of flat and gently sloping roofs which exceed 50 feet in width.

d. Terminals are to be provided within 2 feet of corners, the end of ridges, or edges of main roofs.

e. Terminals less than 24 inches in height are to be spaced 20 feet or less. Terminals 24 inches or taller may be placed at intervals not exceeding 25 feet.

f. Ensure that no part of the structure extends outside the cone of protection established by the air terminals. Determine the cone of protection by preparing a simple scaled profile drawing of the structure and then superimposing a 45-degree (a 1:1 cone of protection) triangle on the profile. The apex of the triangle should coincide with the tip of the air terminal whose protected zone is being verified, as illustrated in Figure 1-19. Alternatively for existing structures, the field expedient method illustrated in Figure l-20 showing a 2:1 cone of protection can be used to determine the coverage of prominent projections. This method is particularly useful for small structures.

To determine if all parts of a flat roofed structure such as vents, pipes, cabling, or raised extensions are protected, use the method illustrated in Figure 1-21 to calculate the zone protected by two vertical terminals. This method can also be used to determine the coverage provided by vertical masts or horizontal wires. In Figure 1-21 point P represents the point of discrimination. That is, the point of departure of the final stepped leader of the downward traveling stroke (see Volume I, Section 3.2). To determine if the air terminals are

actually the nearest objects to point P, use P as a center and swing an arc of radius X through the tips of the terminals. Let the value of this radius X be 100 feet, since 100 feet represents the shortest length usually associated with a stepped leader (see Volume I, Section 3.2). Because of the large differences between the height of typical terminals and the striking distance X, graphical determination of the protected zone will usually be awkward. For greater accuracy, calculate the critical distances through the use of the following equation:

$$G = H - X + \sqrt{X^2 - \left(\frac{S}{2}\right)^2} \qquad (1\text{-}2)$$

which is valid for S ‹ 2X. In this equation, G is the minimum height between the terminals that is completely protected; H is the height of the terminals, S is the spacing between terminals, and X is the radius of the arc.

Sample calculation. To illustrate the application of this method, suppose it is necessary to determine the minimum spacing between 3-foot air terminals that will guarantee that all parts of a flat roof remain in the protected zone. In other. words, what value of S corresponds to G = 0 in Equation l-2? To perform the calculation, first set G = 0:

$$0 = H - X + \sqrt{X^2 - \left(\frac{S}{2}\right)^2}$$

Rearranging to be

$$X - H = \sqrt{X^2 - \left(\frac{S}{2}\right)^2}$$

and squaring both sides produces

$$X^2 - 2HX + H^2 = X^2 - \left(\frac{S}{2}\right)^2$$

Eliminating X^2 and changing signs on both sides of the equation yields

$$\left(\frac{S}{2}\right)^2 = 2HX - H^2$$

or

$$\frac{S^2}{4} = H(2X - H)$$

$$S = 2\sqrt{H(2X - H)}$$

Substituting H = 3 feet and X = 100 feet in this last equation shows that S must equal 48.6 feet or less to guarantee that all parts of the roof remain within the protected zone.

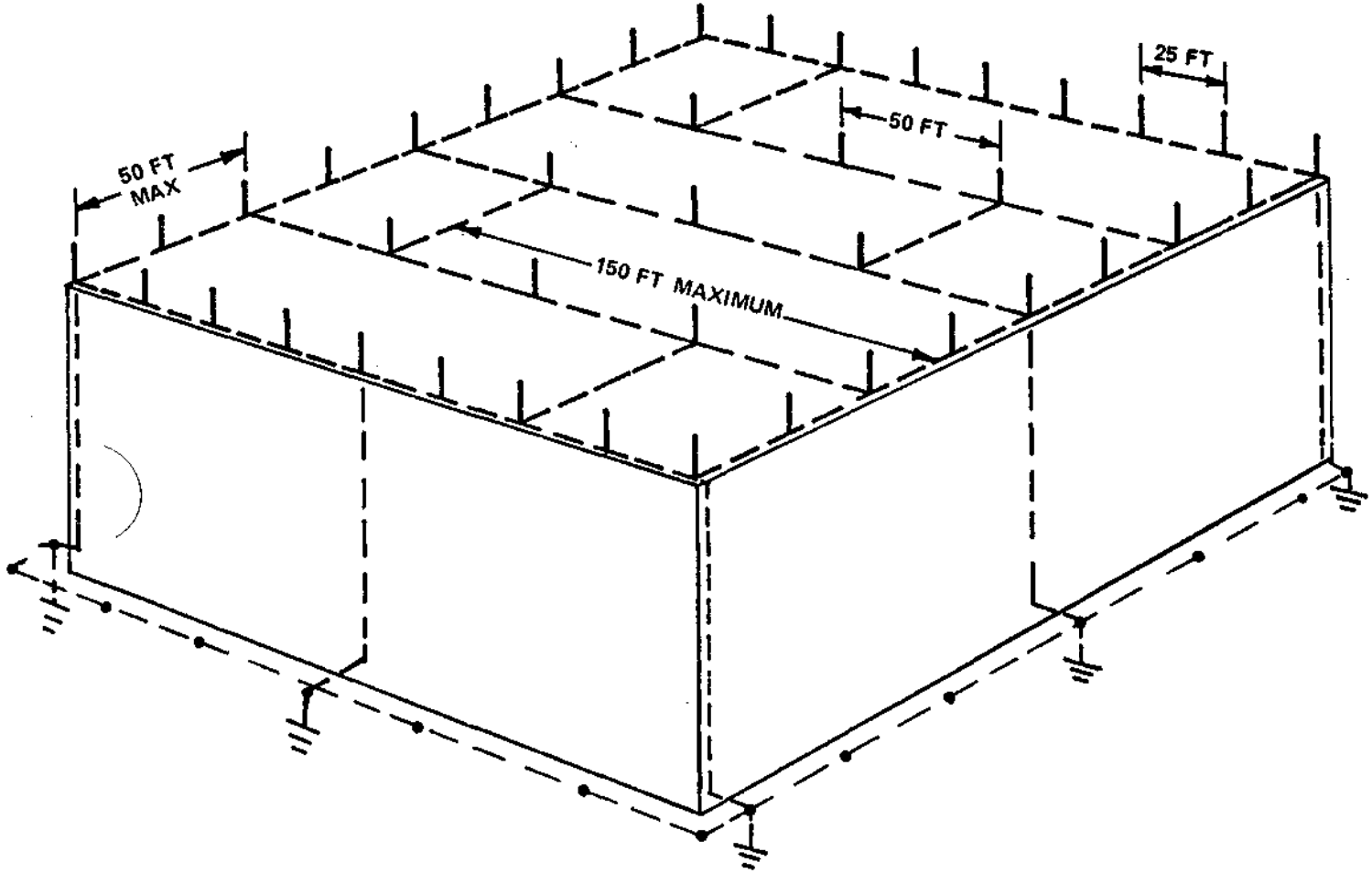

Figure 1-18. Air Terminal Placement on Flat-Roofed Structures

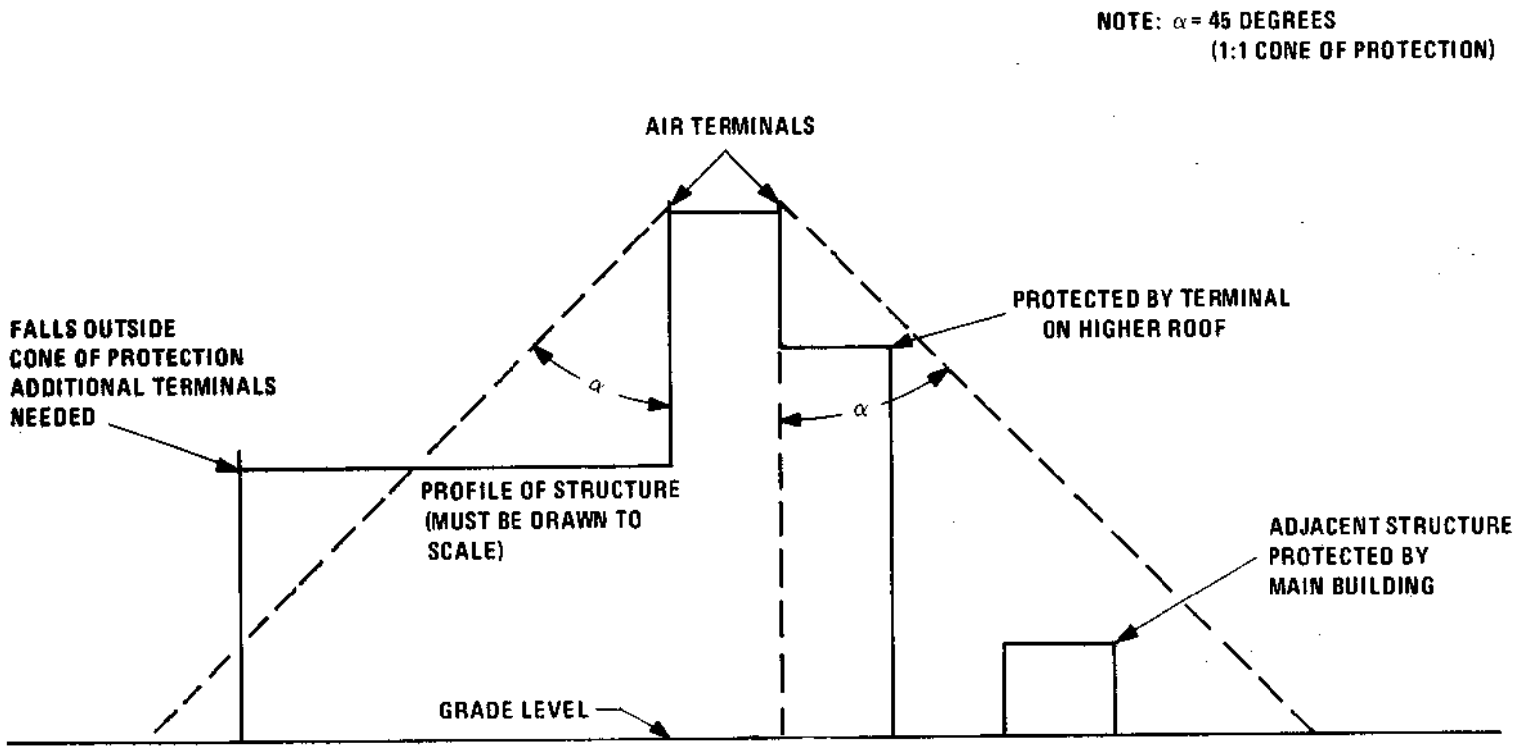

Figure 1-19. Graphical Method for Determining Need for Additional Air Terminals

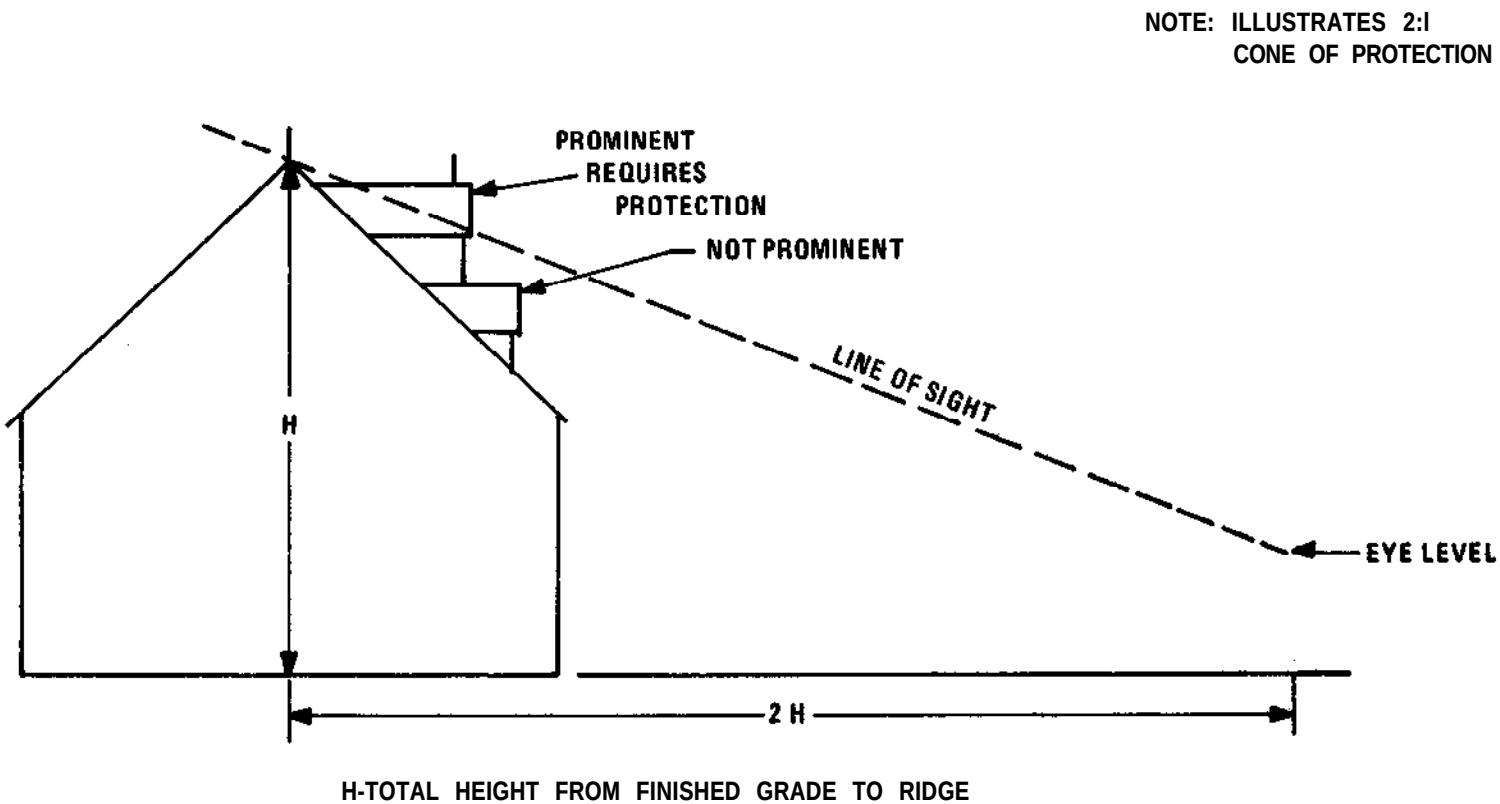

Figure l-20. Field Expedient Technique for Determining the Protection of Prominent Dormers

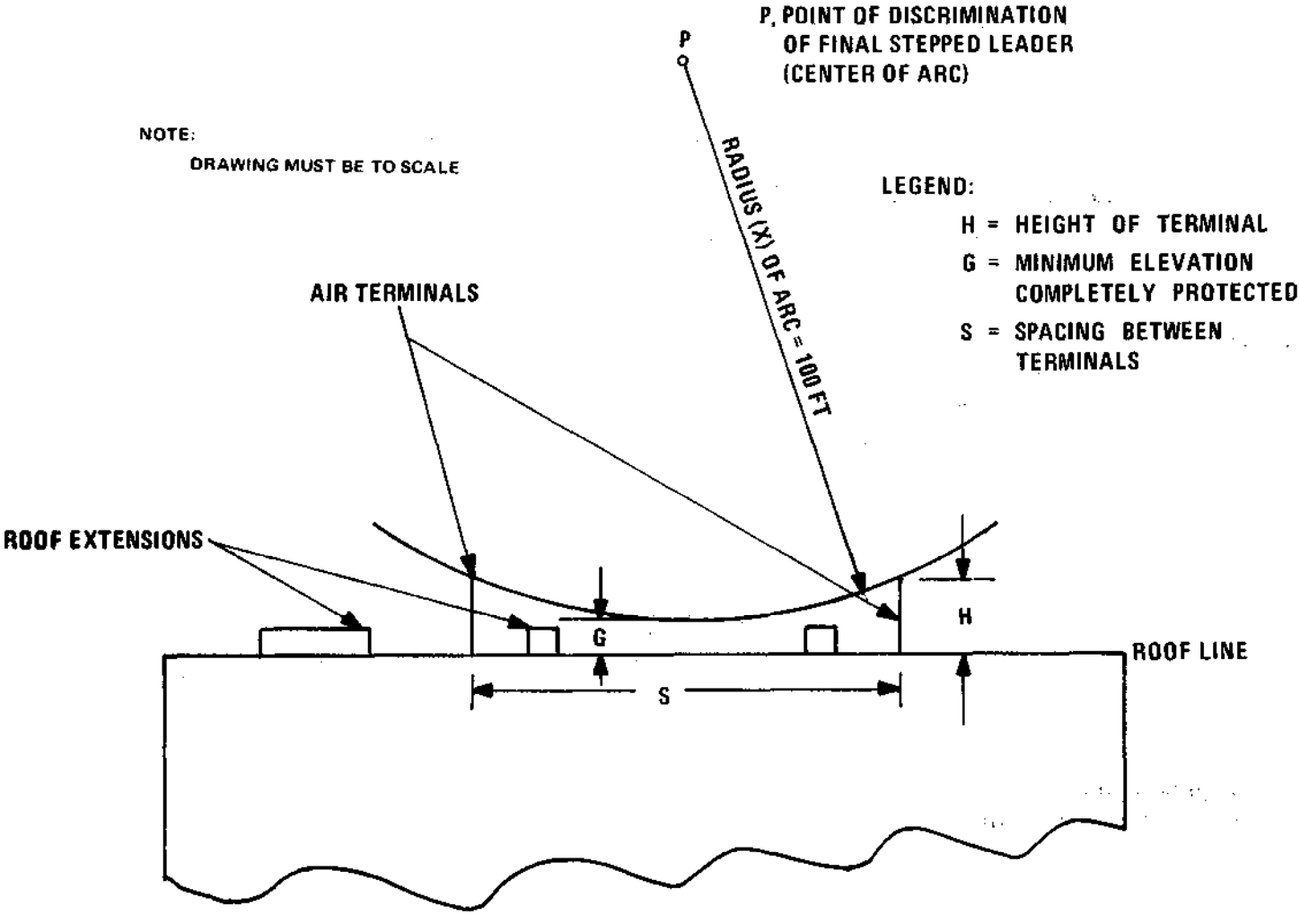

Figure 1-21. Illustration of Method for Determining the Protection of Flat Surfaces as Provided by Air Terminals (l-4)

1.3.2.2 Grounding Conductors. Provide each air terminal with a two-way path to earth through the installation of roof and down conductors conforming to Table 1-2 for structures not greater than 75 feet in height and conforming to Table 1-3 for structures greater than 75 feet in height. An exception is that air terminals located on prominent dormers extending less than 16 feet from the main structure need have only one connecting path from the terminal to the main down conductor as shown in Figure 1-22. Additional information on copper wires is contained in Table 1-4.

1.3.2.2.1 Roof Conductors.

a. Roof conductors should be routed along ridges of gable, gambrel, and hip roofs, and around the perimeter of flat and gently sloping roofs.

b. Roof grounding conductors routed throughout decks, flat surfaces, and flat roofs should be interconnected to form closed loops to insure that all air terminals have at least two paths to earth.

c. Ridge conductors may drop from a higher to a lower roof level without installing an extra down lead at the point of intersection of the two roof levels if there are not more than two air terminals on the lower roof level.

d. On roofs that exceed 50 feet in width, additional conductors are to be provided to interconnect the air terminals required to protect large flat areas (see Figure 1-18). One additional conductor for each 50 feet in width is necessary. For example, on roofs 50 to 100 feet wide, add one additional run; on roofs 100 to 150 feet wide, add two additional runs, etc. These additional runs must be interconnected together and to the perimeter conductor at 150-foot intervals with cross conductors as illustrated in Figure 1-18.

Table 1-2

Minimum Requirements for Roof and Down Conductors on
Structures Not Greater than 75 Feet (23 Meters) in Height (1-3)

Type of Conductor		Material	
		Copper	Aluminum
Cable	Strand Size	14 AWG	12 AWG
	Weight per 1000 feet*	187-1/2 pounds	95 pounds
	Area*	59,500 Cir mils	98,500 Cir mils
	DC Resistance	0.176 ohms/1000 ft	0.176 ohms/1000 ft
Solid Strip	Thickness	14 AWG	12 AWG
	Width	1 inch* *	1 inch**
	DC Resistance	0.176 ohms/1000 ft	0.176 ohms/1000 ft
Solid Rod	Weight Per 1000 feet	186-1/2 pounds	95 pounds
	DC Resistance	0.176 ohms/1000 ft	0.176 ohms/1000 ft
Tubular Rod	Weight per 1000 feet	187-1/2 pounds	95 pounds
	Wall Thickness	0.032 inch	0.064 inch
	DC Resistance	0.176 ohms/1000 ft	0.176 ohms/1000 ft

*Acceptable substitutes are No. 2 AWG copper cables and 1/0 AWG aluminum cables.

**This is the minimum width for a strip void of perforations. If perforated, the width shall be increased equal to the diameter of the perforations.

Table 1-3

Minimum Requirements for Roof and Down Conductors on
Structures Greater than 75 Feet (23 Meters) in Height (1-3)

Material	Minimum Wire Strand Size*	Weight Per Foot	Weight Per 1000 Feet	DC Resistance Per 1000 Feet
	AWG	Ounces	Pounds	Ohms
Copper	14	6	375	0.088
Aluminum	12	3	190	0.088

*Equivalent standard AWG cable: Copper - 2/0, Aluminum - 4/0

Table 1-4. Solid Copper Wire - Weight, Breaking Strength, DC Resistance
(Based on ASTM Specifications B1-56, B2-52, and B3-63)

		Area		Weight		Hard		Medium		Soft	
Size, AWG	Diameter, in.	Cir mils	Sq in.	Lb per 1,000 ft	Lb per mile	Breaking strength, minimum lb	DC resistance at 20° C (68° F) maximum, ohms per 1,000 ft	Breaking strength, minimum lb	DC resistance at 20° C (68° F) maximum, ohms per 1,000 ft	Breaking strength, maximum lb	DC resistance at 20° C (68° F) maximum, ohms per 1,000 ft
4/0	0.4600	211,600	0.1662	640.5	3382	8143	0.05045	6980	0.05019	5983	0.04901
3/0	0.4096	167,800	0.1318	507.8	2681	6720	0.06362	5666	0.06330	4744	0.06182
2/0	0.3648	133,100	0.1045	402.8	2127	5519	0.08021	4599	0.07980	3763	0.07793
1/0	0.3249	105,600	0.08291	319.5	1687	4518	0.1022	3731	0.1016	2985	0.09825
1	0.2893	83,690	0.06573	253.3	1338	3688	0.1289	3024	0.1282	2432	0.1239
2	0.2576	66,360	0.05212	200.9	1061	3002	0.1625	2450	0.1617	1928	0.1563
3	0.2294	52,620	0.04133	159.3	841.1	2439	0.2050	1984	0.2039	1529	0.1971
4	0.2043	41,740	0.03278	126.3	667.1	1970	0.2584	1584	0.2571	1213	0.2485
5	0.1819	33,090	0.02599	100.2	528.8	1590	0.3260	1265	0.3243	961.5	0.3135
6	0.1620	26,240	0.02061	79.44	419.4	1280	0.4110	1010	0.4088	762.6	0.3952
7	0.1443	20,820	0.01635	63.03	332.8	1030	0.5180	806.7	0.5153	605.1	0.4981
8	0.1285	16,510	0.01297	49.98	263.9	826.1	0.6532	644.0	0.6498	479.8	0.6281
9	0.1144	13,090	0.01028	39.61	209.2	660.9	0.8241	513.9	0.8199	380.3	0.7925
10	0.1019	10,380	0.008155	31.43	166.0	529.3	1.039	410.5	1.033	314.0	0.9988
11	0.0907	8,230	0.00646	24.9	131	423	1.31	327	1.30	249	1.26

Table 1-4. Solid Copper Wire - Weight, Breaking Strength, DC Resistance
(Based on ASTM Specifications B1-56, B2-52, and B3-63) (Continued)

		Area		Weight		Hard		Medium		Soft	
Size, AWG	Diameter, in.	Cir mils	Sq in.	Lb per 1,000 ft	Lb per mile	Breaking strength, minimum lb	DC resistance at 20° C (68° F) maximum, ohms per 1,000 ft	Breaking strength, minimum lb	DC resistance at 20° C (68° F) maximum, ohms per 1,000 ft	Breaking strength, maximum lb	DC resistance at 20° C (68° F) maximum, ohms per 1,000 ft
12	0.0808	6,530	0.00513	19.8	104	337	1.65	262	1.64	197	1.59
13	0.0720	5,180	0.00407	15.7	82.9	268	2.08	209	2.07	157	2.00
14	0.0641	4,110	0.00323	12.4	65.7	214	2.63	167	2.61	124	2.52
15	0.0571	3,260	0.00256	9.87	52.1	170	3.31	133	3.29	98.6	3.18
16	0.0508	2,580	0.00203	7.81	41.2	135	4.18	106	4.16	78.0	4.02
17	0.0453	2,050	0.00161	6.21	32.8	108	5.26	84.9	5.23	62.1	5.05
18	0.0403	1,620	0.00128	4.92	26.0	85.5	6.64	67.6	6.61	49.1	6.39
19	0.0359	1,290	0.00101	3.90	20.6	68.0	8.37	54.0	a.33	39.0	8.05
20	0.0320	1,020	0.000804	3.10	16.4	54.2	10.5	43.2	10.5	31.0	10.1
21	0.0285	812	0.000638	2.46	13.0	43.2	13.3	34.4	13.2	24.6	12.8
22	0.0253	640	0.000503	1.94	10.2	34.1	16.9	27.3	16.8	19.4	16.2
23	0.0226	511	0.000401	1.55	8.16	27.3	21.1	21.9	21.0	15.4	20.3
24	0.0201	404	0.000317	1.22	6.46	21.7	26.7	17.5	26.6	12.7	25.7
25	0.0179	320	0.000252	0.970	5.12	17.3	33.7	13.9	33.5	10.1	32.4
26	0.0159	253	0.000199	0.765	4.04	13.7	42.7	11.1	42.4	7.94	41.0

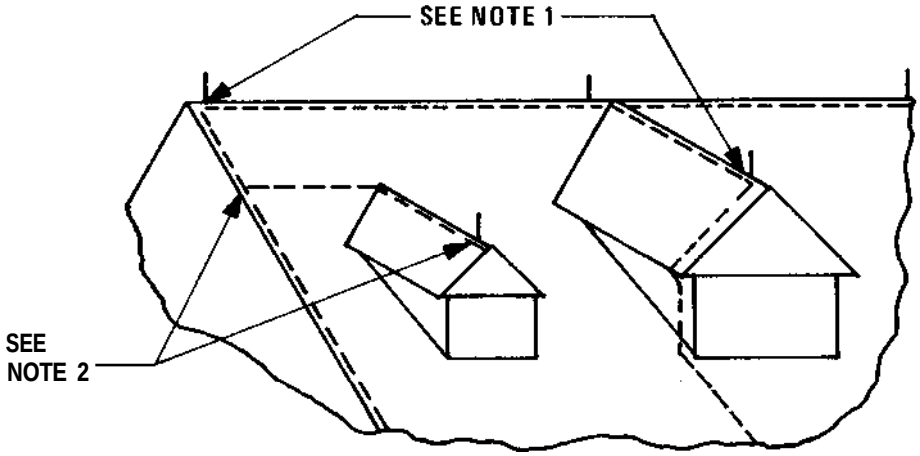

NOTES:

1- DEAD ENDS ARE NOT ACCEPTABLE ON MAIN RIDGES OR ON RIDGES OF DORMERS OR SIDE WINGS AS HIGH OR HIGHER THAN THE MAIN RIDGE.

2 - TOTAL CONDUCTOR LENGTH NOT TO EXCEED 16 FEET.

Figure 1-22. Criteria for Dead End Coverage

e. Maintain a horizontal or downward course with roof conductors. Provide "U" or "V" (up and down) pockets with a down conductor from the base of the pocket (see Figure 1-23(a)) to ground or to a convenient lead of the main down conductor.

f. Route conductors through or around obstructions which lie in a horizontal plane with the conductor (Figure 1-23(b) and (c)). Bends in the conductor should not include an angle of less than 90 degrees and should maintain a radius of 8 inches or greater (Figure 1-23(d)). In particular, re-entrant loops should be avoided (1-5). When routing around obstructions, wide gradual bends are preferred. Other recommended practices are illustrated in Figures 1-23(e) thru (h).

g. Securely attach the conductors directly to the ridge roll or roof with UL-approved fasteners every 3 feet.

h. Conductors may be coursed through air up to 0.9 meters (3 feet) without support. With an acceptable support such as a 1.9 cm (3/4-inch) copper-clad ground rod or its equivalent, securely fastened at each end, a conductor may be coursed up to 1.8 meters (6 feet) through air.

1.3.2.2.2 Down Conductors.

a. Course down conductors over the extreme outer portions of the structure and separate them as far apart as possible. Preferred locations are at diagonally opposite corners on square or rectangular structures and symmetrically distributed around cylindrical structures.

b. Locate down conductors as close as practical to air terminals and to the most convenient places for attaching the conductors to the earth electrode subsystem of the structure. The down conductors should be equally and symmetrically spaced about the perimeter of the structure.

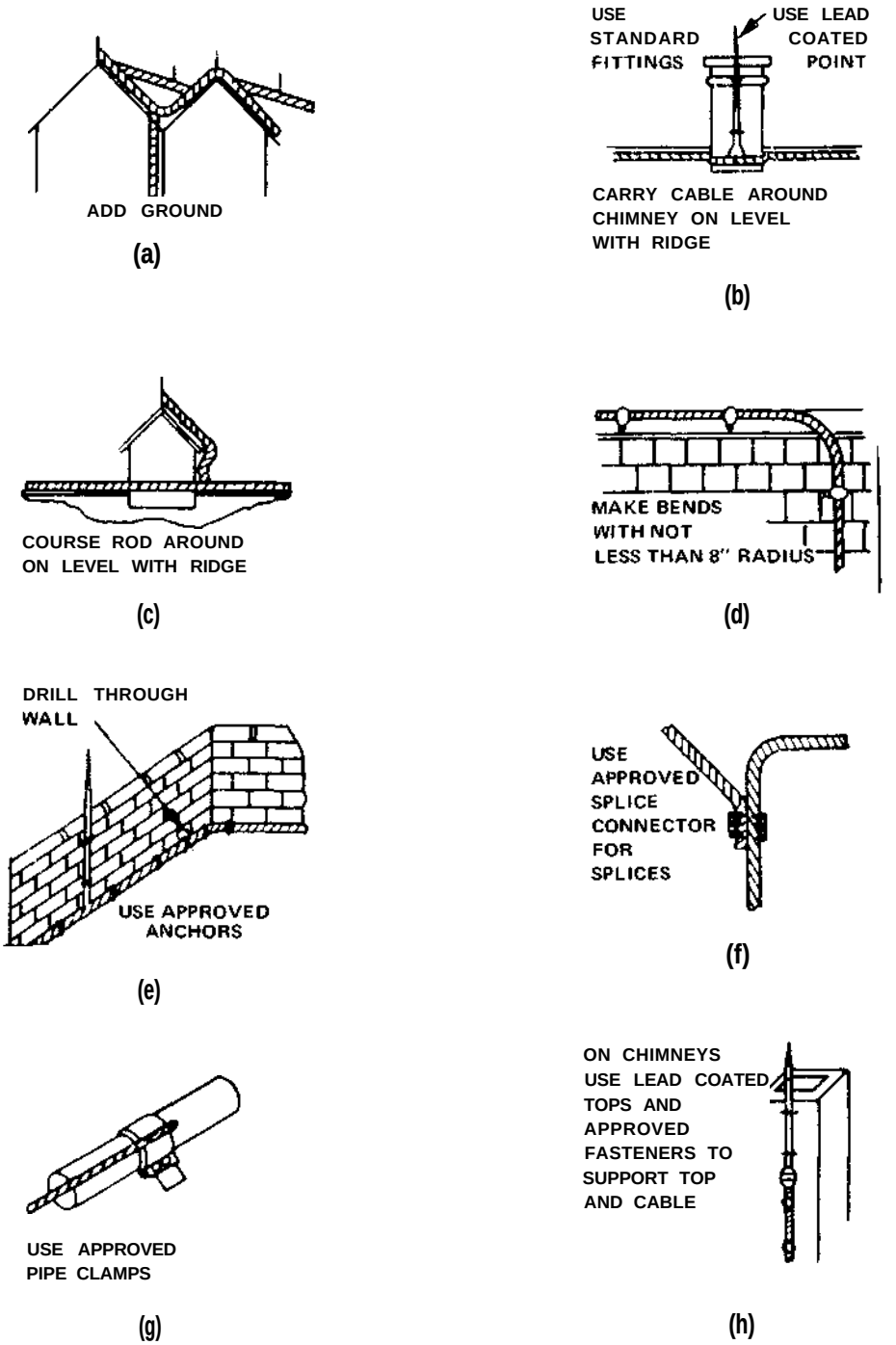

Figure 1-23. Recommended Construction Practices for Integral Lightning Protection Systems

c. At least two down conductors are required on all structures except on slender objects like flag poles, antenna masts (not substantial towers), light poles, and the like.

d. Provide one additional down conductor for each additional 30 meters (100 feet) or fraction thereof on structures having a perimeter exceeding 75 meters (250 feet). On structures having flat or gently sloping roofs and on irregular-shaped structures, the number of down conductors should be such that the length of the average roof conductor joining them does not exceed 30 meters (100 feet). On structures higher than 18 meters (60 feet) where down conductors are required, install at least one additional down conductor for each 18 meters (SO feet) of height or fraction thereof; however, the spacing between down conductors need not be less than 15 meters (50 feet).

e. Down conductors are to be provided or located appropriately to avoid dead ends in excess of 4.8 meters (16 feet) in length. See Figure 1-22, Note 1.

f. Maintain down conductors in a downward course with routing around or through any obstruction which may lie in the path. Sharp bends or turns are to be avoided with necessary turns limited to not less than 90 degrees and not less than 20 cm (8 inches) in radius.

g. Where large re-entrant loops (i.e., those with greater than 90-degree turns) cannot be avoided, e.g., around cornices or over parapets, the conductor should be routed to ensure that the open side of the loop is greater than one-eighth the length of the remaining sides of the loop. It is advised, however, to course the conductor through holes or troughs through the obstacles and avoid the loop completely (as shown in Figure 1-23(e)) whenever possible.

h. On structures with overhangs such as antenna towers with extended platforms or buildings utilizing cantilevered construction, run the down conductors vertically through the interior of the structure (l-5). Internally routed conductors must be enclosed in nonmetallic, noncombustible ducts.

i. Substantial metal structural elements of buildings may be substituted for regular lightning conductors where, inherently or by suitable electrical bonding, they are electrically continuous from the air terminal to the earth electrode connection. The structural elements must have a conducting cross-sectional area, including that in joints, at least twice that of the lightning conductor that would otherwise be used. There need be no difference whether such conductors are on the interior or exterior of the structure when used for down conductors. Steel frame buildings encased in bricks or other masonry products must have external air terminals and roof conductors installed and bonded directly to the structural members to keep the lightning discharge from having to penetrate the masonry shell to reach the frame members.

1.3.2.3 Fasteners.

a. Securely attach air terminals and roof and down conductors to the building or other object upon which they are placed.

b. Fasteners (including nails, screws, or other means by which they are attached) should be substantial in construction, not subject to breakage, and should be of the same material as the conductor or of a material that will preclude serious tendency towards electrolytic corrosion in the presence of moisture because of contact between the different metals. (For further information on corrosion, see Volume I, Section 7.8.)

c. Keep all hardware, component parts, and joints that are not welded or brazed and that require inspection for maintenance and repair readily accessible.

d. Any special fixtures required for access should be permanently attached to prevent loss. However, appropriate locks or other devices essential to safety, security, and physical protection of the hardware or of the area in which it is located may be used.

1.3.3 Separately Mounted Protection Systems.

1.3.3.1 Mast Type.

a. No part of the structure being protected should extend outside the protected zone as calculated by the procedure illustrated by Figure 1-19 (a conservative estimate for two masts can be made with the aid of Figure 1-24).

b. Where it is impractical to provide a common mast to provide protection for an entire structure, additional masts should be provided.

c. If the pole is made of a nonconducting material, provide an air terminal extending not less than 0.6 meters (2 feet) nor more than 0.9 meters (3 feet) above the top of the pole.

d. Connect the base of the mast (if metal) or the down conductors to the earth electrode subsystem of the protected structure with at least a No. 6 AWG copper conductor or equivalent.

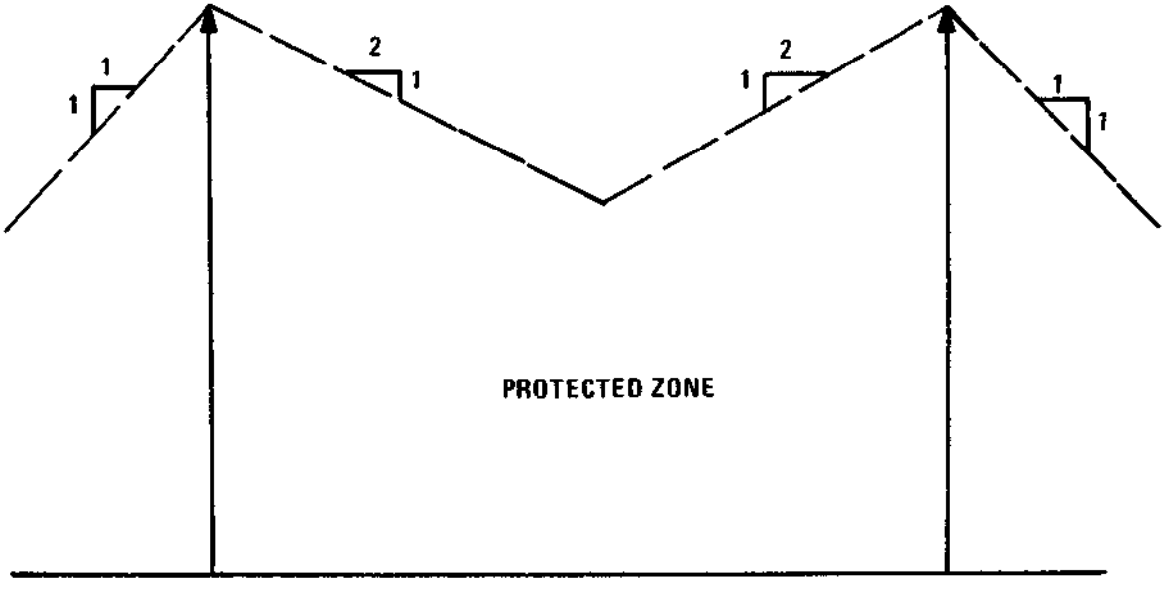

Figure 1-24. The Protected gone Provided by Two Vertical Masts

1.3.3.2 Overhead Ground Wire Type.

a. If the poles are of a nonconducting material, an air terminal shall be securely mounted on the top of each pole, extending not less than 0.45 meters (1.5 feet) above the top of the pole. Down conductors are run down the side of the pole or the guy wire may be employed as the conductor as shown in Figure 1-25. If the guy wire is used, it shall meet the requirements of paragraph 1.3.2.2 and both this wire and the overhead ground wire are dead-ended at the pole. The overhead ground wire and the guy wire shall be interconnected with a separate cable. Down conductors and guy wires used as down conductors are to be connected to the earth electrode subsystem of the structure being protected. Guy wires not located near existing earth electrode subsystems shall be grounded either to their respective ground anchor (by use of an interconnecting cable) or to a separate ground rod.

b. The height of the poles should be sufficient to provide a clearance of not less than 1.8 meters (6 feet) between the overhead ground wire and the highest projection on the building. When the overhead ground wire system is used to protect stacks or vents which emit explosive dusts, vapors, or gases under forced draft, the cable is installed so that it has a clearance of at least 4.5 meters (15 feet) above the object receiving protection.

C. With either the mast type or the overhead ground wire type of system, the pole is placed at a distance from the structure that is at least one-third the height of the structure, but in no instance less than 1.8 meters (6 feet). Figure l-25 refers.

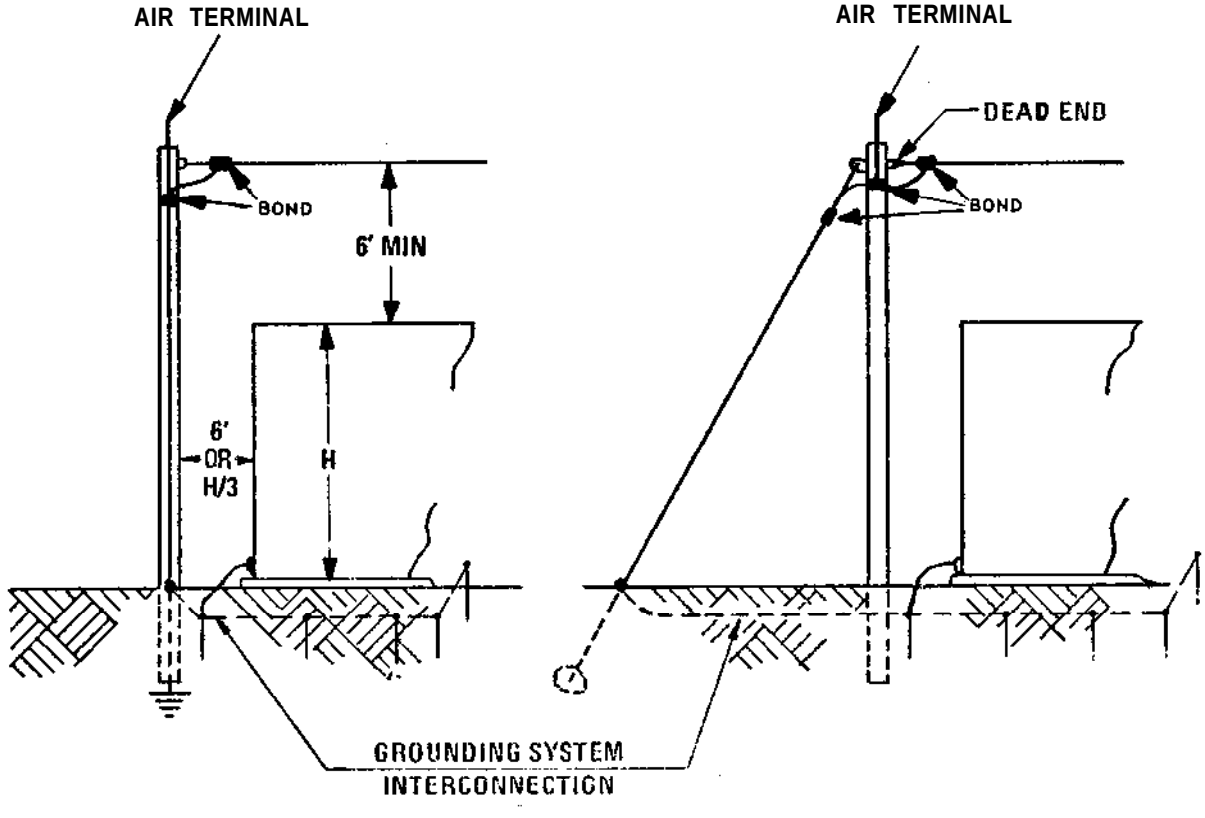

Figure 1-25. Overhead Ground Wire Lightning Protection System

1.3.3.3 Waveguide Installation and Grounding. Waveguide between the antenna and the associated transmit/receive equipment should be grounded in the following manner.

a. Each waveguide shall be bonded to the down conductor of the air terminal at the top near the antenna and also at the bottom near the vertical to horizontal transition point. The waveguide shall also be bonded to the antenna tower at the same points as well as at an intermediate point if the tower exceeds 60 meters (200 feet).

b. All waveguide support structures shall be bonded to the tower. The waveguides and supporting structure shall be bonded together at the waveguide entry plate and connected to the earth electrode subsystem.

c. All waveguides, conduit or piping entering a building shall be bonded to the waveguide entry plate, then to the earth electrode subsystem (see Figures 1-26 thru 1-31). For waveguide penetrations of a shielded enclosure or entry plate see Volume I, Section 10.4.2.4.

d. Rigid waveguides within 1.8 meters (6 feet) of each other should be bonded together through the entry plate or by means of a crimp type lug fastened under the waveguide flange bolts and No. 6 AWG wire. The bond shall be extended to the bus at the waveguide entry point and connected to the earth electrode subsystem.

e. Determine location of ground strap position as shown in Figure 1-28A and remove waveguide jacket. The ground strap is made from a piece of waveguide as detailed in Figures 1-29 and 1-30. Clean mating surfaces (waveguide and strap) with solvent or cleaning fluid.

f. Wrap the strap with No. 14 AWG copper wire (for 8 GHz waveguide as shown Figure 1-28A). For 4 GHz waveguide, use No. 10 AWG solid copper wire. Use adjustable stainless steel clamps as required to secure the strap. Tighten screw until the clamp grips firmly. Excessive tightening could damage the waveguide and impair the electrical characteristics. Weatherproof with Scotch Guard or equivalent and tape.

g. An alternate method of securing the strap to the waveguide is to use wrap-around heat shrink to cover the bond and to maintain weatherproofing. Solder one end of a solid copper wire (#10 for 4 GHz and #14 for 8 GHz waveguide) to one end of corrugated portion of the ground strap. Align the corrugated section of the ground strap with the exposed section of the waveguide (see Figure 1-28B). Tightly wrap the wire around the ground strap and waveguide and solder the end of the wire to the ground strap for securing purposes. Apply the wrap-around heat shrink around the waveguide and heat according to the manufacturer's instructions.

h. Remove all sharp and rough edges on ground strap.

i. An alternate method for grounding waveguide is also shown on Figure 1-26.

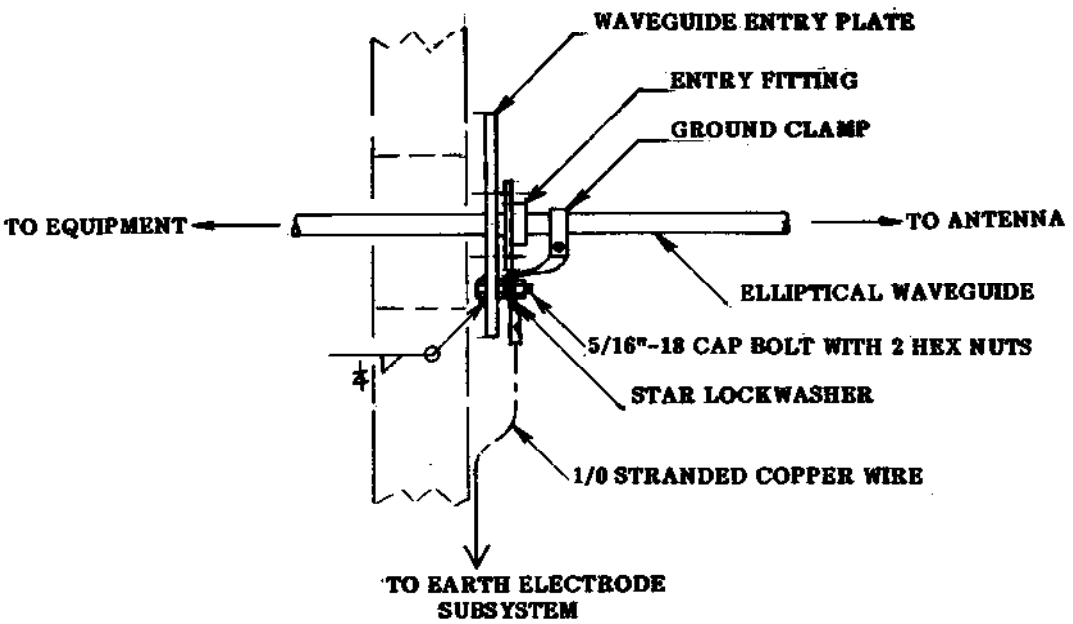

NOTE: To satisfy HEMP requirements, peripherally bond waveguide to waveguide entry plate.

Figure 1-26. Waveguide Entry Plate Detail

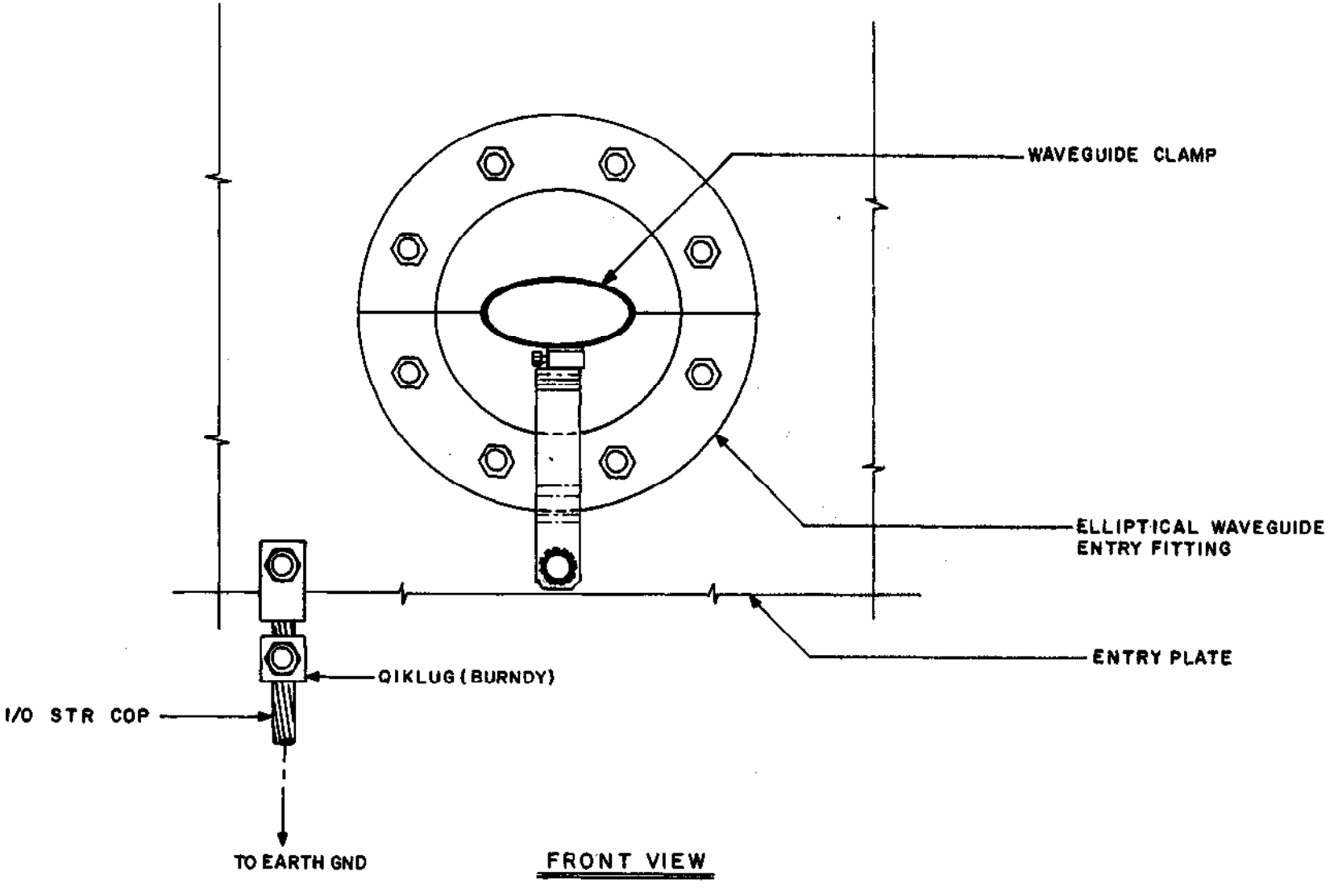

Figure 1-27. Grounding Detail for Elliptical Waveguide

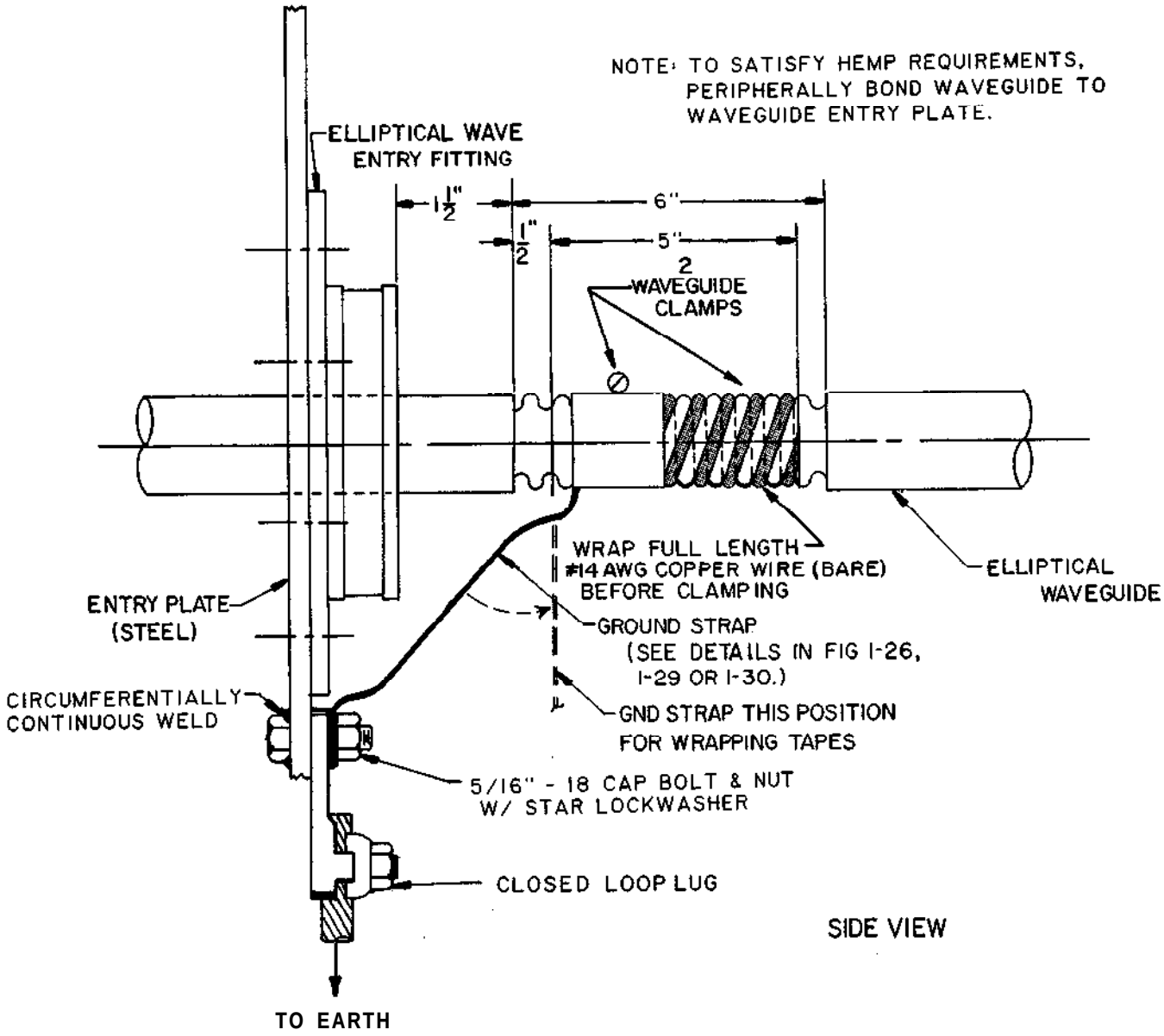

Figure 1-28A. Grounding Details for Elliptical Waveguide

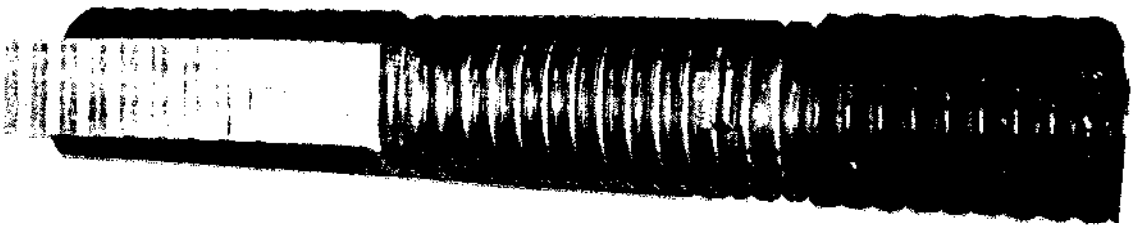

Figure 1-28B. Heat Shrink Grounding

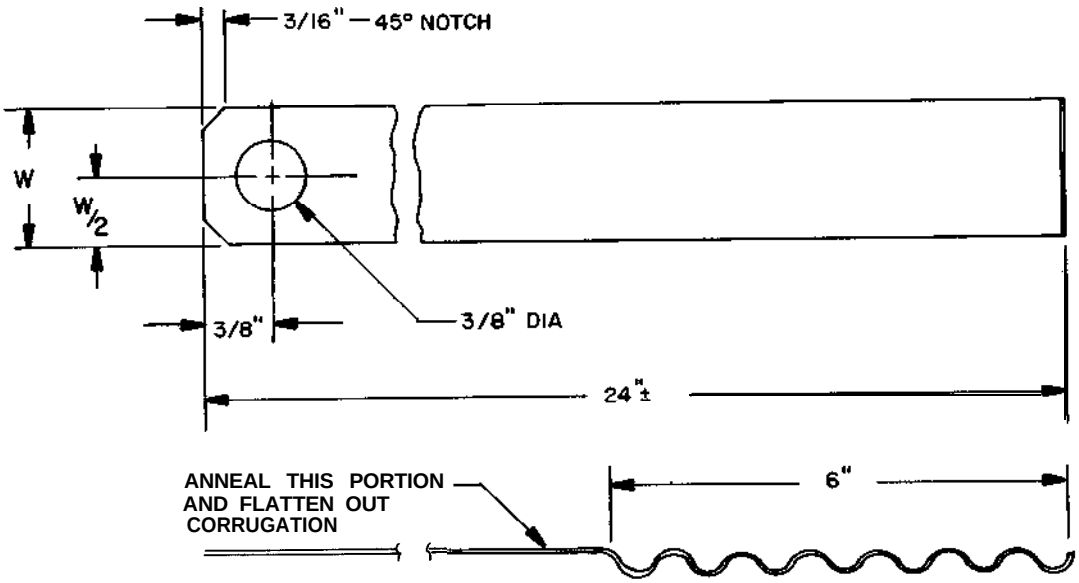

Figure 1-29. Ground Strap Detail for Elliptical Waveguide

NOTE: FOR FIGURES 1-29 AND 1-30
W= 1-1/4" FOR 4-GHz WAVEGUIDE
W= 1" FOR 8-GHz WAVEGUIDE

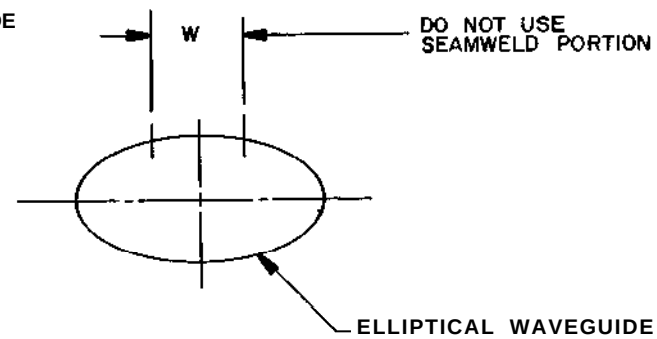

Figure 1-30. Strap Cutting Detail for Elliptical Waveguide

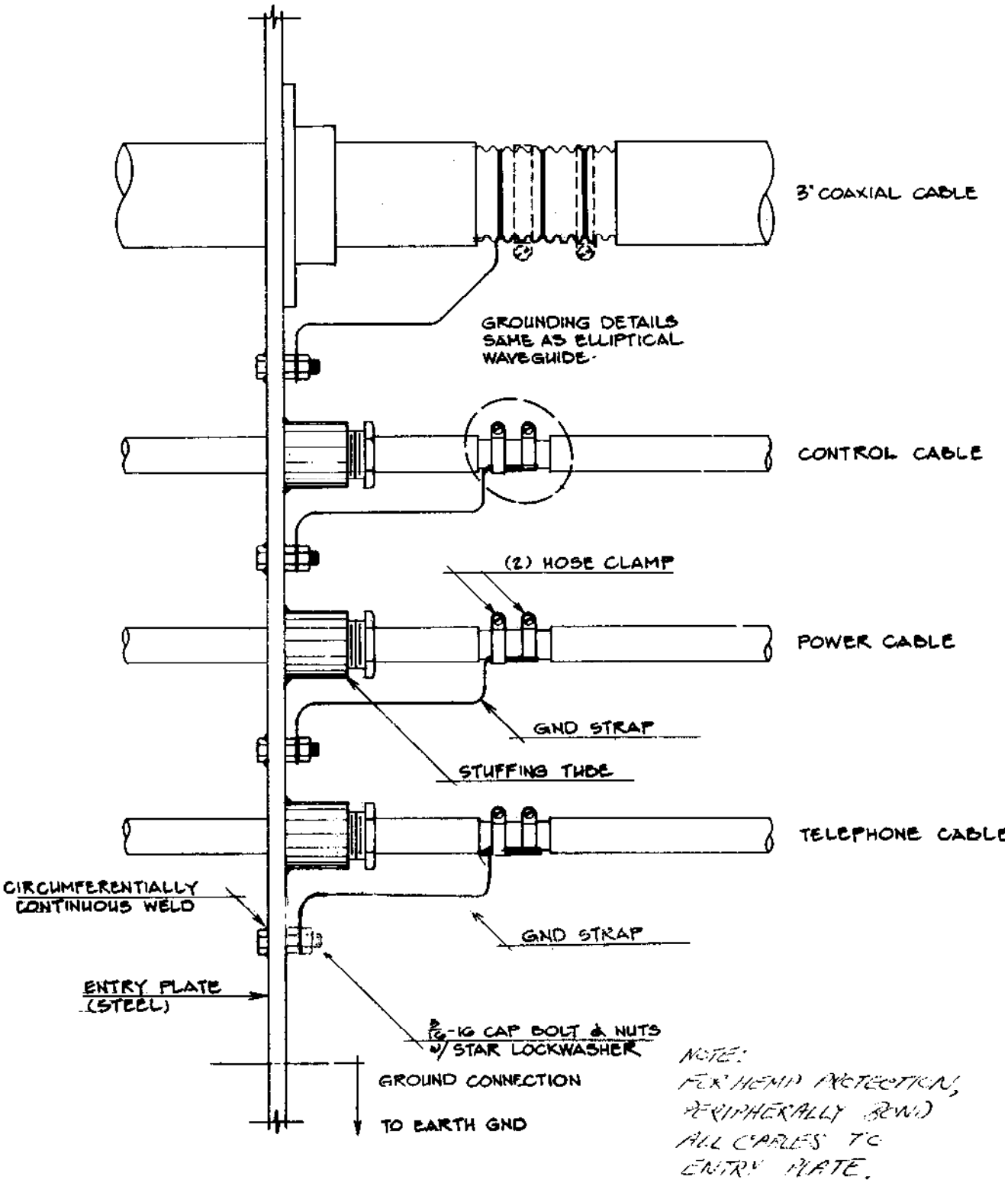

Figure 1-31. Typical Communication Cable Entry Installation

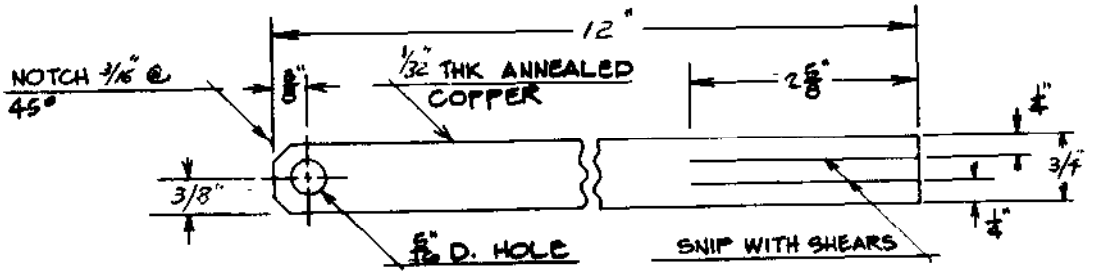

Figure 1-32. Ground Strap Detail

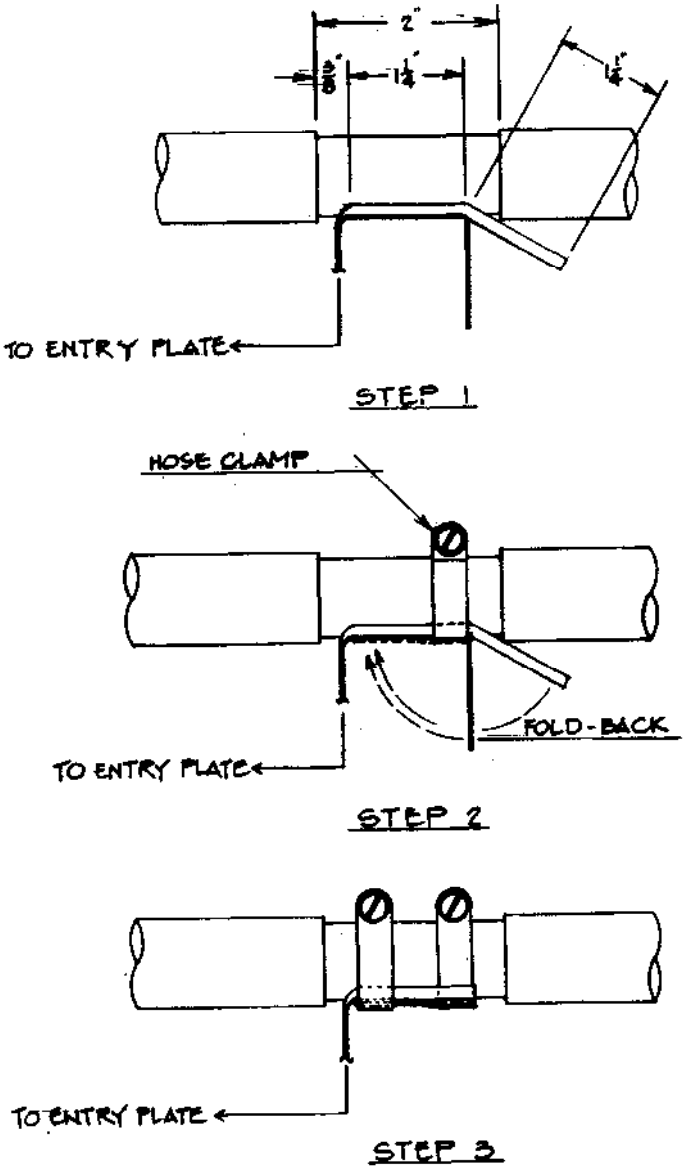

Figure 1-33. Grounding Steps for Cables

1.3.3.4 Cable Installation and Grounding. Cables which enter a facility shall be installed generally using Figure 1-31 as a guideline. The final design shall rest with the designer; however, the following steps apply in general. (Figures 1-32 and 1-33)

a. Remove outer cable jacket very carefully so as not to damage the cable shield (see Figure 1-33, step 1).

b. Preform ground strap to fit cable diameter and secure the first hose clamp as outlined in the next step (see Figure 1-33, step 2)

c. Fold back ground strap (about 3.2 cm (1-1/4") long) over hose clamp and cable for a snug fit. Secure second hose clamp around the folded strips of the ground strap described in the next step (see Figure 1-33, step 3).

d. For small diameter cable use a No. 6 AWG 7-strand copper wire with a lug connector on the other end. Secure the stranded cable using the same method as for the strap.

e. After attaching all ground straps, tape (weatherproof) the exposed area.

1.3.3.5 Lightning-Generated Transient Surge Protection. Electrical and electronic equipment at various facilities has been severely damaged by lightning-generated transients. The transients occur on externally exposed lines that directly interface equipment. Externally exposed lines are outside lines, buried, overhead, etc, that are exposed to weather elements. The lines include incoming ac service conductors, and equipment signal, status, control, grounding conductors and intrafacility ac and dc powerlines. This section identifies transient source and damage, waveforms and amplitudes of projected transients on different types of lines, frequency of transient occurrence, and effective methods to implement to preclude equipment damage and operational upset when transients occur.

1.3.3.5.1 Transient Source and Equipment Damage.

a. Electrical and electronic equipment comprising an operating system is susceptible to damage from lightning-generated transient surges via two primary sources as follows:

(1) Transient surges coupled to equipment from incoming commercial ac power conductors.

(2) Transient surges coupled to equipment by connected facility control, status, power, ground, data and signal lines that originate or terminate at equipment located externally to the building or structure housing the equipment of interest.

b. Damage resulting from lightning-generated transients occurs in many forms. Entire equipment chassis have been exploded and burned, and wall-mounted equipments have been blown off the wall by large-magnitude transient energy. However, two forms of damage are most prevalent and are listed below:

(1) Sudden catastrophic component failure at the time of transient occurrence.

(2) Shortened operating lifetime of components resulting from over-stress at time of transient occurrence.

1.3.3.5.2 Minimizing Damage.

a. Damage can be minimized, and in most instances eliminated, by properly using the generally field-proven protection methods detailed in this section. In order to be cost effective and to provide effective protection, allocation of protection must be divided into three general categories which are:

(1) Transient suppression (metal conduit and guard wires) for outside lines that interface equipment to be protected.

(2) Installation of transient suppression devices on both ends of exterior lines immediately after equipment building penetration or at exterior equipment termination, and on incoming ac service entrance lines at the facility main service disconnect means. On shielded facilities, transient suppression devices (TSD's) should be installed in an entry vault or inside the main service disconnect box.

(3) Including transient suppression as an integral part of protected equipment at the exterior line-equipment interfaces.

b. If realistic transient protection is to be designed, frequency of transient occurrence, amplitudes and waveforms of transients, and the withstand level of protected equipment must be defined. The withstand level is the short-duration voltage and current surge levels that equipment can withstand without overstressing or immediate destruction of components occurring, and without equipment operational upset occurring. The information required for effective protection is provided in this section. The most susceptible components are identified together with typical withstand levels. Frequency of transient occurrence is also provided. Because of the large physical size of incoming ac service conductors, less impedance (resistance and inductance) is presented to transient surge current flow. As a result, amplitude and waveforms of transients appearing at ac inputs are quite different from those appearing at control, status, data, signal, and in-system powerline inputs. Therefore, protection for incoming ac power service conductors is discussed separately from that for other externally exposed lines.

1.3.3.5.3 Susceptible Components. Integrated circuits, discrete transistors and diodes, capacitors, and miniature relays, transformers, and switches used in the design of solid-state equipment are very susceptible to damage from lightning-generated transient surges. Other components are not immune to damage but are susceptible to a much lesser degree. Standards do not exist for specifying the withstand level against lightning-transients for most equipment and components. Therefore, accurate information must be obtained from manufacturers, laboratory testing performed or conservative engineering estimates made. Typical withstand level limits for some common types of equipment and components are:

a. Integrated circuits: 1.5 times normal rated junction and Vcc voltage.

b. Discrete transistors: 2 times normal rated junction voltage.

c. Diodes: 1.5 times peak inverse voltage.

d. Miniature relays, transformers, and switches: 3 times rated voltage.

e. Capacitors: 1.5 times dc working voltage unless transient dielectric punch-through voltage known.

f. DC power supplies with step-down transformer and diode bridge: 1.5 times diode peak inverse voltage (PIV) rating times the transformer secondary to primary voltage ratio.

g. Small motors, small transformers and light machinery: 10 times normal operating voltage.

h. Large motors, large transformers and heavy machinery: 20 times normal operating voltage.

1.3.3.5.4 Frequency of Transient Occurrence. Precise calculation of the number of lightning-generated transients that will occur at a specific location in a specified time interval is not possible. However, enough observations have been made to permit statistical evaluation of the number of lightning flashes that are likely to occur in an area with a known average number of thunderstorm days per year. Some flashes may not produce any transients while others will produce several transients. The available data, after considerable averaging and rounding, is provided in Table 1-5. The table lists a typical number of transients that might be expected to occur from lightning strikes at facilities located in high-and low-incident lightning areas. When used in conjunction with Figure 1-34, the table will permit calculation of the number of lightning surges that will occur anywhere in the United States in a 10-year period. Decrease 1750 by 10% for each 10 decrease in the number of thunderstorm days per year.

Table 1-5. Frequency of Transient Occurrences

Number of Lightning Surges In 10 Years at One Facility	
High Incident Area (100 Thunderstorm Days Per Year)	Low Incident Area (10 Thunderstorm Days Per Year)
1750	175

1.3.3.5.5 Transient Definition, AC Service Conductors. Prediction of the exact amplitude, waveforms, and number of transients that will occur at a particular facility over a specific time interval is not possible. However, current amplitudes generated by many direct lightning strikes have been measured, and the waveforms for the current have been measured and recorded. Also, sufficient data has been recorded to permit statistical calculation of waveforms and amplitudes that are likely to occur. This data is provided in subsequent paragraphs. Frequency of occurrence is provided in paragraph 1.3.3.5.4.

a. Transient amplitudes from direct strikes. Measured current amplitudes resulting from direct lightning strikes have varied from 1,000 amperes to 250,000 amperes. Results of several thousand measurements have been reduced and are provided in Table 1-6. As shown in Table l-6, typical peak current is 10 to 20 kiloamperes. Table 1-7 tabulates the peak current amplitudes measured for 2721 flashes. The median peak value for the peak currents was approximately 15 kiloamperes. This is in agreement with the typical values

provided in Table 1-6, and there is agreement among authoritative sources that the peak current for a large percentage of strikes is in the 10 to 30 kiloampere range. Note that in Table 1-7, 1818 of the 2721 current amplitudes or 66.8% were in the range of 1 to 20 kiloamperes. Also note that only 14% were greater than 40,000 amperes, and it follows directly that 86% of the peak amplitudes were 40 kiloamperes or less. Only 45 of the 2721 measured amplitudes, or 1.65%, were above the 100-kiloampere level. Also, it is emphasized that the peak current amplitudes noted in the foregoing resulted from direct strikes to metal towers for primary transmission lines.

b. Induced transient amplitude. After installation of appropriate transient suppression, induced transients will still occur as a result of close proximity, high-intensity strikes, and some transient energy will be coupled through the service transformer onto the incoming ac service lines. The amplitude of those coupled and induced transients will be reduced a minimum of 50% of direct strike amplitudes due to earth resistance, attenuation of electromagnetic fields due to propagation through air, and coupling losses imposed by the service transformer winding. Therefore, 86% of the transient current surges appearing at a facility main service disconnect means will be 20 kiloamperes or less, and the greatest percentage, 68%, of the surges will be in the 500 ampere to 10,000 ampere range. Only 1% of the surges will be above 50 kiloamperes, and only 0.25% will be above 75 kiloamperes. Table 1-8 provides a tabulation of transient amplitudes and the percentage of transients on incoming ac lines that will as a maximum be of the amplitude listed.

c. Transient waveforms, ac lines. Waveshapes for transients will vary depending on the proximity of the strike, intensity of the strike, and length and inductance of the incoming ac service lines. Table 1-6 lists the typical time to peak current as 1.5 to 2 microseconds and 40 to 50 microseconds as the typical time from the start of the pulse until the current decays to 50% of peak value. Thus, a typical waveform for current surges generated by a direct strike is 2-by-40 microseconds. Transients measured at main service disconnects (amplitudes in excess of 3,000 volts) have had rise times of, 1 to 2 microseconds and decay times of 20 to 40 microseconds. However, the inductance of some incoming ac service lines will slow down the rise time slightly. Most manufacturers of secondary ac surge arresters use either 8-by-20 or lo-by-20 microsecond current waveforms for testing and specification purposes, primarily because the waveform is relatively easy to generate while a 2-by-40 microsecond waveform is quite difficult to generate. The 8-by-20 or 10-by-20 microsecond waveforms are considered suitable for testing. However, the user of the arrester should be aware of the following:

(1) Transients with rise times faster than 8 microseconds may appear across the arrester terminals resulting in a higher sparkover or turn-on voltage for the arrester than specified.

(2) Transients with decay times up to 40 microseconds may appear across the arrester terminals which will require the arrester to dissipate considerably more transient energy than would be required for a 20 microsecond decay time.

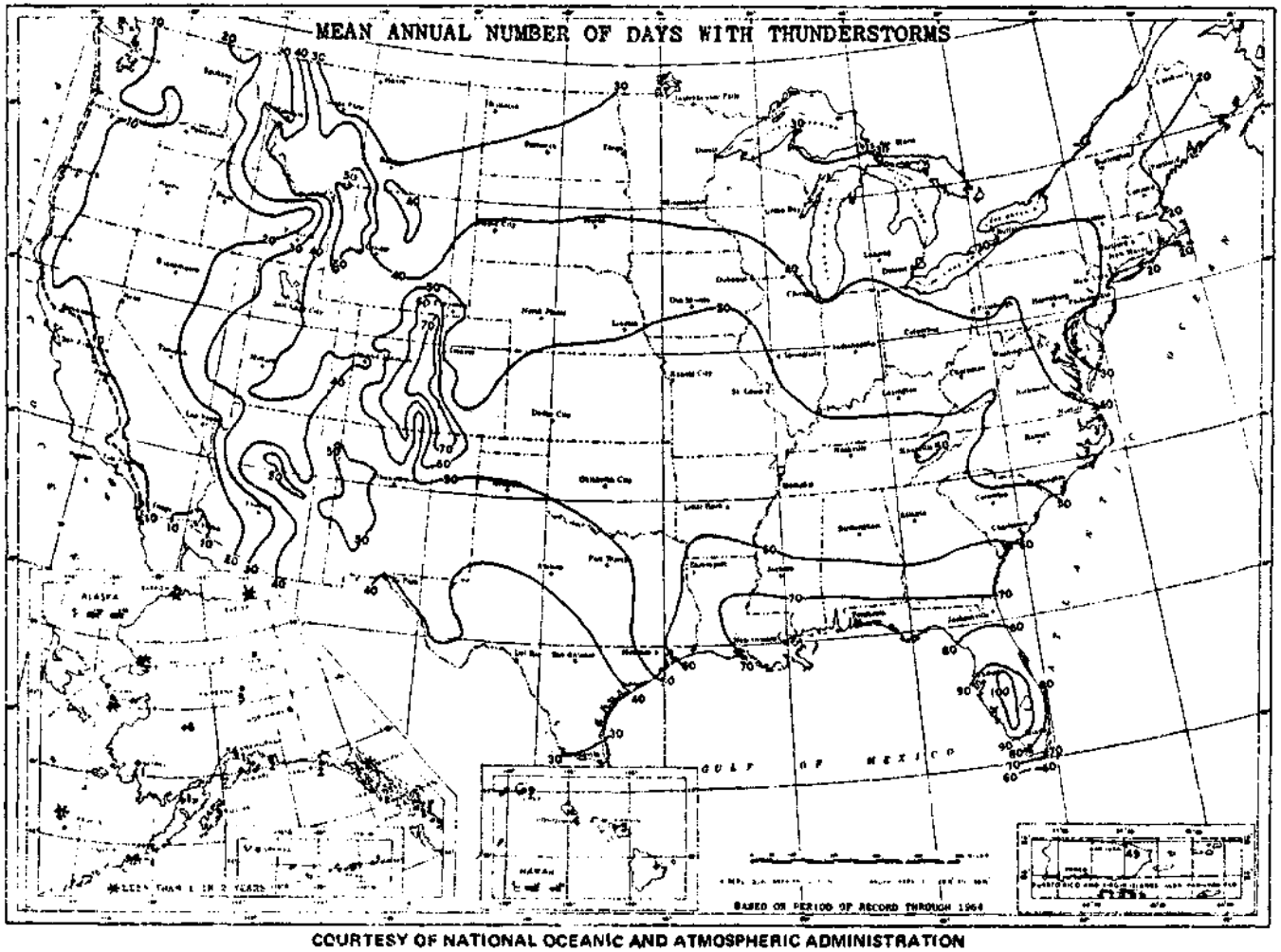

COURTESY OF NATIONAL OCEANIC AND ATMOSPHERIC ADMINISTRATION

Figure 1-34. Mean Number of Thunderstorm Days per Year for the United States

Table 1-6

Parameter for Direct Lightning Strike Current

Parameter	Minimum	Typical	Maximum
Number of return strokes per flash	1	2 to4	26
Time between strokes (ms)	3	40 to 60	100
Peak current per return stroke (kA)	1	10 to 20	250
Time to peak current (μs)	< 0.5	1.5 to 2	30
Rate of rise (kA/μs)	< 1	20	210
Time to half-value (μs)	10	40 to 50	250
Duration of continuing current (ms)	50	150	500
Peak continuing current (amperes)	30	150	1600

Table 1-7. Peak Currents from Direct Lightning Strikes

Range of current, (amperes)	No. of Flashes with Peak Current in Range	No. at or above Level	Percentage at or above Level
1,000 - 5,000	567	2,721	100
5,001 - 10,000	611	2,154	79.2
10,001 - 20,000	640	1,543	56.7
20,001 - 30,000	296	903	33.2
30,001 - 40,000	227	607	22.3
40,001 - 50,000	140	380	14.0
50,001 - 60,000	80	240	8.82
60,001 - 70,000	61	160	5.88
70,001 - 80,000	22	99	3.64
80,001 - 90,000	21	77	2.83
90,001 - 100,000	11	56	2.06
100,001 - 110,000	11	45	1.65
110,001 - 120,000	9	34	1.25
120,001 - 130,000	9	25	0.918
130,001 - 140,000	7	16	0.588
140,001 - 150,000	2	9	0.331
150,001 - 160,000	3	7	0.257
160,001 - 170,000	0	4	0.137
170,001 - 180,000	1	4	0.147
180,001 - 190,000	0	3	0.110
190,001 - 200,000	1	3	0.110
200,001 - 210,000	0	2	0.073
212,000	1	2	0.073
218,000	1	1	0.037
	2,721		

Table 1-8. Transient Surge Amplitudes

Transient Surge Amplitude (Amperes)	Percentage of Transients at Listed Amplitude
500 to 2,500	21%
2,501 to 5,000	23%
5,001 to 10,000	24%
10,001 to 20,000	19%
20,001 to 30,000	8%
30,001 to 40,000	3%
40,001 to 50,000	1%
50,001 to 75,000	0.9%
75,001 to 100,000	0.1%

1.3.3.5.6 Methods for Transient Protection on AC Service Conductors. Proper use of the following provides effective protection against lightning generated transients on incoming ac powerlines.

a. Completely enclosing buried lines in ferrous metal, electrically continuous, watertight conduit.

b. Use of overhead guard wires to protect overhead lines.

c. Installation of a secondary ac surge arrester at the facility main service disconnect means.

d. Including surge suppressors as in integral part of equipment at ac power inputs and rectifier outputs of low-level (5 to 48 volt) power supplies, when a power supply operates from commercial ac power and supplies operating power for solid-state equipment.

e. Installation of suitable surge arresters on the primary and secondary of the service transformer.

f. Installation of powerline filters shall be in accordance with NACSIM 5203.

1.3.3.5.7 Use of Ferrous Metal Conduit. Since transients are induced on buried lines by electromagnetic waves created by lightning current flow, all buried incoming ac service lines should be completely enclosed in ferrous metal, watertight conduit. To be effective, the conduit must be electrically continuous and effectively bonded to the building entry plate and grounded to earth ground at each end. No. 2 AWG bare copper stranded cable is suitable for the earth ground connection, and exothermic welds provide effective bonding in earth. Approved pressure connectors are suitable for use above ground. The conduit should extend from the service transformer secondary to the facility main service disconnect means. This use of metal conduit will eliminate low-level induced transients, and will attenuate otherwise high-amplitude induced transients by 90% minimum. Although the conduit provides effective protection against induced transients, it does not provide protection against transients that enter the service conductors directly from the secondary of the service transformer.

1.3.3.5.8 Use of Overhead Guard Wires. Since enclosing overhead incoming ac service lines in metal conduit is not feasible, experimentation has proved that the use of an overhead guard wire provides an effective level of protection for overhead service conductors against direct lightning strikes. This guard wire also provides a low level of protection against transients induced on lines by close proximity strikes as well as nearby cloud to cloud discharges. The guard wire must be located above and parallel to the service conductors. To be effective, the height of the guard wire must be that required to form a 1:1 cone of protection for the service conductors (see Volume I, Section 3.5.2), and the guard wire must extend from the secondary of the service transformer for the facility to the facility service entrance fitting. Also, at each end the guard wire must extend to, and be bonded to, an effective earth ground or to the earth electrode subsystem of the facility. When the distance between terminating facilities exceeds 250 feet, the guard wire shall also be bonded to a ground rod meeting the requirements of MIL-STD-188-124A, paragraph 5.1.1.1.4. Also refer to MIL-STD-188-124A, paragraph 5.1.1.3.10.2 regarding the type and size requirements of the guard wire. Since the guard wire and the earth electrode subsystem are comprised of different metals, exothermic welding is recommended.

1.3.3.5.9 Protection of Underground Cables.

a. Protect against direct lightning strikes to buried cable by installing a guard wire above the cables or cable duct. A 1/0 AWG bare copper cable laid directly over the protected cables as shown in Figure 1-35(a) is recommended. At least 25.4 cm (10 inches) should be maintained between the protected cables and the guard wire.

b. For a relatively narrow spread of the cables, 0.9 meters (3 feet) or less, or for a duct less than 0.9 meters (3 feet) wide, only one guard wire cable is necessary. For wider cable spreads or wider ducts, at least two 1/0 AWG cables should be provided as illustrated in Figure 1-35(b). (Since the guard wire and protected cables are embedded in the earth, the applicable cone of protection is not known.)

1.3.3.5.10 Buried Guard Wire. Experimental use of a buried guard wire embedded in soil above and parallel to buried cable runs not enclosed in metal conduit has provided effective attenuation of lightninginduced transients. Use of the guard wire is recommended for protection of buried equipment lines not enclosed in metal conduit. Bare 1/0 AWG copper wire has provided the most effective protection during experimental use. To be effective, the guard wire must be embedded in the soil a minimum of 25 cm (10 inches) above and parallel to the protected cable run or duct. When the width of the cable run or duct does not exceed 0.9 meters (3 feet), one guard wire, centered over the cable run or duct, provides adequate protection. When the cable run or duct is more than 0.9 meters (3 feet) wide, two guard wires should be installed. The guard wires should be spaced at least 30 cm (12 inches) apart and be not less than 30 cm (12 inches) nor more than 45 cm (18 inches) inside the outermost wires or the edges of the duct. To be effective, the guard wires must be bonded to the earth electrode subsystem at each terminating facility. Exothermic welds provide the most effective bonding. The requirement and need for underground guard wires shall be determined by the project and civil engineer and shall be determined on a case and location basis dependent upon the priority of the circuit and the degree of lightning anticipated.

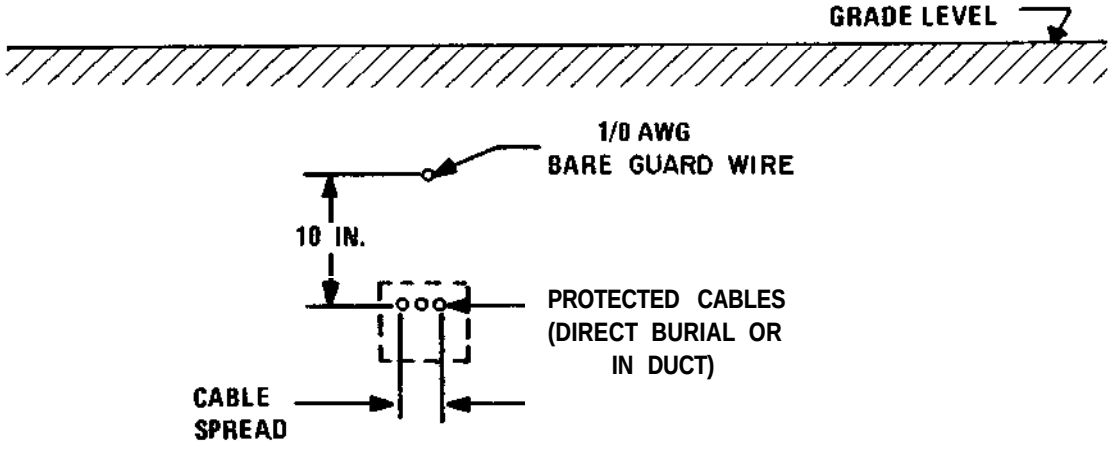

(a) CABLE SPREAD LESS THAN 3 FEET

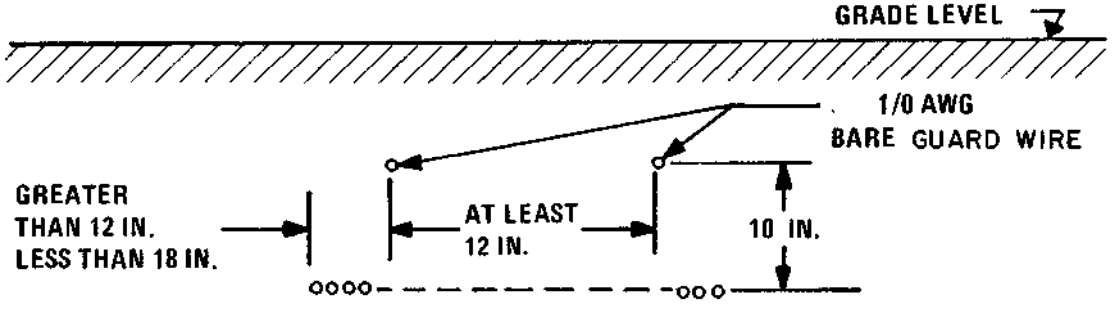

(b) CABLE SPREAD 3 FEET OR GREATER

Figure 1-35. Lightning Protection for Underground Cables

1.3.3.5.11 Secondary AC Surge Arrester. Installation of a properly selected secondary ac surge arrester at the facility main service disconnect means provides the best method for ensuring that high energy transients are not coupled to equipment by ac distribution lines within the facility. The surge arrester installed must have certain characteristics to ensure adequate protection.

a. Characteristics.

(1) Be capable of safely dissipating transients of amplitudes and waveforms expected at the facility for a predetermined period of time. Selection of an arrester that will provide protection for a period of ten years is recommended.

(2) Have a turn-on time fast enough to ensure that transient energy will not cause damage before the surge arrester turns on and clamps.

(3) Maintain a low enough discharge (clamp) voltage while dissipating transient current to prevent damage to protected equipment.

(4) Have a reverse standoff voltage high enough to ensure nonconduction during normal operation.

(5) Be capable of complete extinguishing after firing on an energized line.

b. Additional requirements. In addition to the above, the surge arrester must be properly installed to ensure optimum operation. The input to each phase arrester contained in the surge arrester should be fused to provide protection against overload of, or damage to, the ac supply in the event an arrester should short. Also, indicator lights and an audible alarm that go off when a fuse opens should be provided on the front of the surge arrester enclosure as a maintenance aid.

1.3.3.5.12 Surge Arrester Installation. Proper installation of the surge arrester is of vital importance for optimum operation. A surge arrester with excellent operating characteristics cannot function properly if correct installation procedures are not used. The most important installation criteria are provided below and applies to surge arrester phase input connections and the ground connection. All surge arresters should be installed in accordance with the manufacturer% recommendations.

a. Installation criteria.

(1) If possible, install arresters inside the first service disconnect box to keep interconnecting lead lengths as short as feasible.

(2) Use interconnecting wire of sufficient size to limit resistance and inductance in the transient path to ground through the surge arrester.

(3) Interconnecting wiring should be routed as straight and direct as possible with no sharp bends, and the least number of bends possible.

(4) Do not include loops in the wiring.

(5) Must be grounded by the shortest low impedance path available.

b. Surge arrester input connections. Installation of surge arresters is shown for grounded and ungrounded service in Figures 1-36 and 1-37 respectively. For best possible protection, the line supply side of the main service disconnect means should be connected to the phase input(s) of the surge arrester. However, when necessary to facilitate removal of ac power for surge arrester maintenance, it is permissible to connect the surge arrester to the load side of the main service disconnect means. In order to prevent introducing excessive inductance and resistance in the transient path to the surge arrester, No. 4 AWG (minimum) insulated stranded copper wire of the minimum feasible length must be used to make the interconnection(s) unless otherwise recommended and guaranteed by the manufacturer. Also, the interconnecting wiring must not contain loops or sharp bends. Otherwise, the response time of the surge arrester will be delayed and a higher clamp voltage than that of the surge arrester will be impressed across the protected equipment, thus increasing the possibility of damage. In the event a very fast transient should occur, it is quite likely that the surge arrester would never turn on, and all of the transient energy would be dissipated by supposedly protected equipment.

c. Surge arrester ground connection. When the surge arrester is not properly grounded, its response time will be delayed and a higher clamp voltage than that of the surge arrester will be impressed across the equipment being protected. This can also be expected if the earth ground connection for the surge arrester contains loops or sharp bends or is not properly bonded to the earth electrode subsystem. To overcome this problem, stranded copper wire specified in accordance with Article 280 of the NEC must be used to make the ground connection unless other specifications are provided by the manufacturer of the surge arresters. Figure l-36 shows the surge arresters installed to ensure the most direct route to ground thereby minimizing the lead inductance(s) and ensure the firing of the surge arresters. For best results exothermic welds should be used for bonding to the earth electrode subsystem. UL-approved pressure connectors are suitable for above-ground bonds.

1.3.3.5.13 Operating Characteristics of Surge Arresters. Operating characteristics of different types of surge arresters are discussed in the following subparagraphs. Guidelines for selection of an adequate surge arrester are also provided.

a. Transient dissipation capability. Selection of a surge arrester that will provide adequate protection against worst case transients is recommended. Waveforms are defined in Section 1.3.3.5.5. The worst case waveform is 2-by-40 microseconds. The number and amplitude of transients that can be expected to occur can be determined by referring to Tables 1-5 and 1-8.

(1) In a high-lightning incident area (average of 100 thunderstorm days per year), 1750 transients are expected to occur in a lo-year period. Referring to Table l-8, it can be determined that transient amplitudes and occurrence may be as listed in Table 1-9.

(2) In a low-lightning incident area (average of 10 thunderstorm days per year), only 175 transients are expected to occur in a lo-year period. Transient occurrence and amplitudes may be as listed in Table 1-10.

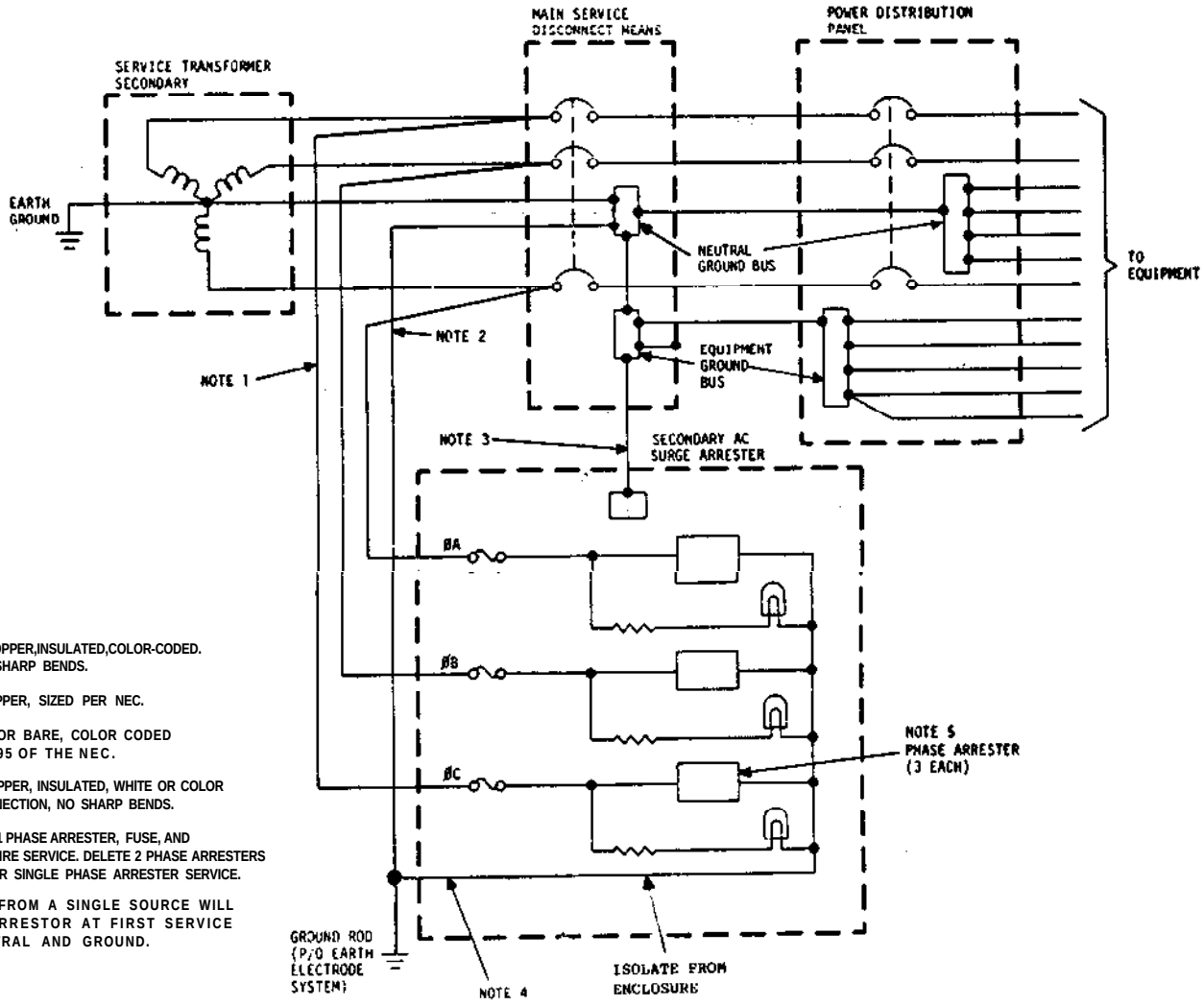

NOTES:

1. NO.4 AWG MINIMUM STRANDED COPPER,INSULATED,COLOR-CODED. SHORT DIRECT CONNECTIONS, NO SHARP BENDS.
2. INSULATED, WHITE, STRANDED COPPER, SIZED PER NEC.
3. STRANDED COPPER, INSULATED OR BARE, COLOR CODED GREEN, SIZE IAW TABLE 250-95 OF THE NEC.
4. NO. 4 AWG MINIMUM, STRANDED COPPER, INSULATED, WHITE OR COLOR CODED WHITE, SHORT DIRECT CONNECTION, NO SHARP BENDS.
5. 3-PHASE ARRESTER SHOWN.DELETE 1 PHASE ARRESTER, FUSE, AND INDICATOR LIGHT FOR 1 -PHASE, 3-WIRE SERVICE. DELETE 2 PHASE ARRESTERS FUSES, AND, INDICATOR LIGHTS FOR SINGLE PHASE ARRESTER SERVICE.
6. MULTI-BUILDINGS SERVICED FROM A SINGLE SOURCE WILL REOUIRE AN ADDITIONAL ARRESTOR AT FIRST SERVICE DISCONNECT BETWEEN NEUTRAL AND GROUND.

Figure 1-36. Secondary AC Surge Arrester Installation, Grounded Service (Single Building from Single Source)

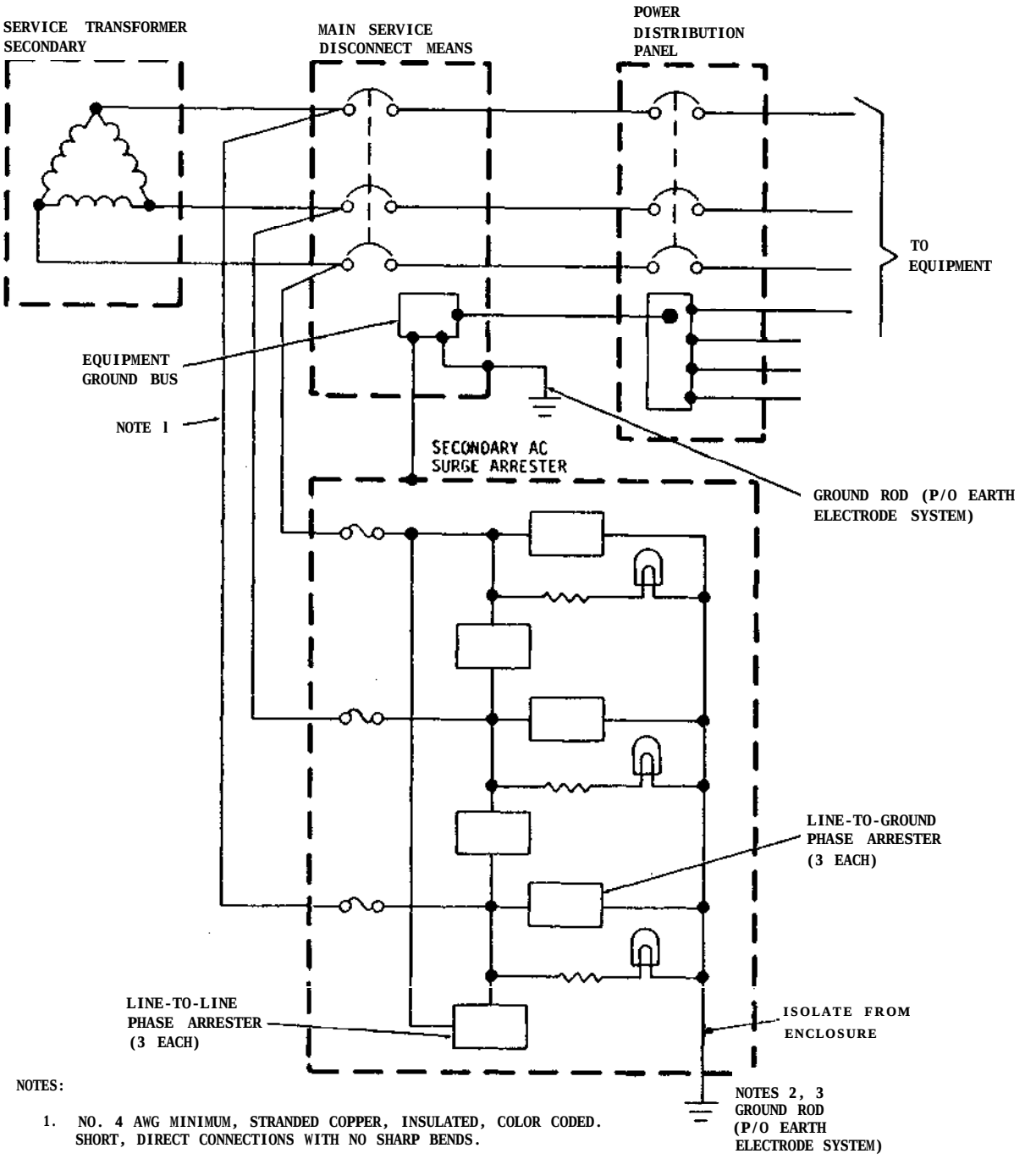

NOTES:

1. NO. 4 AWG MINIMUM, STRANDED COPPER, INSULATED, COLOR CODED. SHORT, DIRECT CONNECTIONS WITH NO SHARP BENDS.
2. NO. 2 AWG MINIMUM, STRANDED COPPER, INSULATED. SHORT, DIRECT CONNECTION WITH NO SHARP BENDS.
3. CAN BE CONNECTED TO GROUND BUS IN MAIN SERVICE DISCONNECT MEANS.

Figure 1-37. Secondary AC Surge Arrester Installation, Ungrounded Service

Table 1-9. Transient Occurrences, High-Incident Lightning Areas

Transient Amplitude (Amperes)			No. of Transients in 10-year Period
500	to	2,500	368
2,501	to	5,000	402
5,001	to	10,000	420
10,001	to	20,000	333
20,001	to	30,000	140
30,001	to	40,000	52
40,001	to	50,000	17
50,001	to	75,000	16
75,001	to	100,000	2

Table 1-10. Transient Occurrences, Low-Incident Lightning Areas

Transient Amplitude (Amperes)			No. of Transients in 10-year Period
500	to	2,500	37
2,501	to	5,000	40
5,001	to	10,000	42
10,001	to	20,000	33
20,001	to	30,000	14
30,001	to	40,000	5
40,001	to	50,000	1.75
50,001	to	75,000	1.5
75,001	to	100,000	0.175

(3) Transient amplitudes are less at small electronic facilities. Recorded data substantiates that large electronic facilities tend to attract higher intensity strikes than small electronic facilities. The transient amplitudes listed in Sections 1.3.3.5.13a(l) and a(2) are for large electronic facilities, and the amplitudes should be decreased by 50% for small electronic facilities. Large electronic facilities are defined as requiring more than 100 amperes per phase for normal operation. The transient amplitudes of Tables 1-9 and 1-10 should be decreased by 50% when relating to a small facility.

b. Turn-on time. Turn-on time (response time) is the time required for an arrester to turn on and clamp a transient after turn-on voltage is impressed across device terminals. All basic suppressor devices used in manufacture of surge arresters are voltage dependent for ionization, breakdown, and other phenomena associated with breakdown. Therefore, a low turn-on voltage enhances a faster turn-on time. Turn-on time requirements for a surge arrester must be directly related to the withstand level for equipment and components being protected. For instance, if only heavy duty electrical equipment, such as motors, contactors, and switches are being protected, relatively slow turn-on of 1 to 5 microseconds can be tolerated. However, if solid-state electronic equipment, or a combination of electrical and electronic solid-state equipment is being protected, turn-on time becomes much more critical. In general, the most rapid response time available is desirable. However, cost and current dissipation capability normally place constraints on such selection criteria. Four types of arresters are currently manufactured as noted below. Additional data for each type is provided in 1.3.3.5.15.

(1) Gas-filled spark gap with series-connected nonlinear resistance.

(2) Zinc oxide nonlinear resistor (ZNR) or metal oxide varistor (MOV).

(3) Solid-state.

(4) Hybrid of above components (development stage).

c. Important turn-on time characteristics. Generalized characteristics for the three basic types of surge arresters are listed in Table 1-11. Turn-on time of 50 nanoseconds is sufficiently fast to protect all except very critical components that would directly receive transient energy prior to turn-on and clamp of the surge arrester. Solid-state units may be used for protection of very critical equipment components, and the gas-filled spark gap type will provide adequate protection for heavy duty electrical equipment such as motors, contactors and switches. However, arresters with slow turn-on time and high turn-on voltage should not be used to protect electronic equipment that has low-voltage, fast turn-on transient suppression devices or circuits included as an integral part of the equipment. Otherwise, the transient suppression in the equipment will turn on and attempt to dissipate transient energy before the surge arrester installed at the main service disconnect means turns on. In most cases, this will rapidly destroy equipment-level transient suppression. The impedance and inductance of power distribution panels and power distribution wiring within the facility will tend to slow down transient rise time and also dissipate some transient energy both before and after the surge arrester turns on. The resistance and inductance works in conjunction with the surge arrester at the main service disconnect means to provide additional protection. However, the true degree of protection thus provided varies widely due to varying transient waveforms, and size and length of distribution wiring within the facility. In summary, the most important characteristics for turn-on time are:

(1) Turn-on time must be rapid enough to preclude damage to equipment resulting from over-voltage before the surge arrester turns on and clamps the incoming transient.

Table 1-11. Generalized Characteristics for Surge Arresters by Type

Type	Turn-on Time	Current Capacity	Firing/Clamp Voltage	Cost
Gas-filled spark gap	5-250 nanoseconds for 10 kV/µs rise time	Extreme duty to 150,000 amperes lifetime: 2500 surges at 10,000 amperes	High - 350 to 5500 volts (firing)	Moderate - $25 to $750
MOV or ZNR	50 nanoseconds or less, any rise time	Varies - can be equivalent to spark-gap type	Moderate - 300 to 3000 volts (clamp)	Moderate - $50 to $1,000
Solid State	10 nanoseconds or less, any rise time	Varies - Generally 50 to 100 amperes except for costly units	Low - 275 to 750 volts (clamp)	High - $100 to $25,000

(2) Turn-on voltage and time for the surge arrester must be compatible with the same characteristics of transient suppressors/circuits included as an integral part of protected equipment. Otherwise equipment-level transient suppressors/circuits will attempt to dissipate the transient before the surge arrester turns on. When this occurs, the equipment level transient suppression will likely be destroyed resulting in damage or operational upset of protected equipment.

d. Discharge (clamp) voltage. The clamp voltage, sometimes referred to as the discharge voltage, for a surge arrester is the voltage that appears across the arrester input terminals and the ground terminal while conducting a transient surge current to ground. The clamp voltage waveform occurring across the surge arrester installed at the main service disconnect means appears across the protected equipment after losses imposed by inductance and resistance of power distribution lines and panels.

(1) In general, a surge arrester with the lowest clamp voltage possible is desirable. An all-solid-state arrester provides the lowest clamping voltage available (Table 1-11). However, as with turn-on time, other factors such as current dissipation capability and cost normally place constraints on simply installing a surge arrester at the main service disconnect means with the lowest clamping voltage available.

(2) In new facilities calling out the latest design equipment, transient surge suppression generally is included as an integral part of the equipment ac input. Higher clamping voltages can therefore be tolerated at the main service disconnect means. When good engineering design practices are used, equipment level suppressors will have a slightly lower turn-on voltage threshold and a slightly faster turn-on time than the surge arrester at the main service disconnect means. This permits the equipment-level suppressors to maintain a lower clamping level to provide maximum equipment protection. Therefore, when a transient occurs, the equipment level suppressor(s) will turn on first.

(3) This circuit operation may generate the requirement for a properly sized (2-microhenry minimum) inductor to be installed in series with applicable ac conductors. If its need has been ascertained, it must be installed between the surge arrester and the integral equipment-level transient suppressor. It may also be designed as an integral part of the surge arrester or the equipment-level transient suppressor.

(4) The equipment-level suppressor will immediately start toward its clamp voltage as transient current is conducted. Because of resistance and inductance in the power distribution lines and panels, the surge arrester will turn on very soon (nanoseconds) after the equipment-level suppressor(s), and will dissipate most of the remaining transient energy. After the surge arrester turns on, the equipment level suppressor(s) are required to dissipate only the transient energy resulting from the clamp voltage of the surge arrester.

(5) Thus, the surge arrester dissipates most of the transient surge, and the equipment-level suppressor(s) provide equipment protection against fast rise time transients and reduce the surge arrester clamp voltage to levels that can be safely tolerated by protected equipment. In summary, the clamp voltage for the surge arrester must be low enough while dissipating a high-energy transient to provide adequate equipment protection taking into consideration:

(a) Protection provided by transient suppression that is an integral part of the facility equipment.

(b) Impedance (resistance and inductance) of power distribution lines and panels within the facility.

e. Reverse standoff voltage. Reverse standoff voltage is specified in various ways by surge arrester manufacturers such as maximum allowable voltage, voltage rating, and reverse standoff voltage. For usage herein, reverse standoff voltage is defined as the maximum voltage that can be applied across the surge arrester and still permit the surge arrester to remain in an off state (current leakage through arrester to ground 100 microamperes or less). Good engineering practice dictates that the surge arrester remains off during normal operation.

(1) Design of effective lightning transient protection requires that the surge arrester turn on very rapidly at the lowest voltage possible when a transient occurs. In addition, it is desirable that a low clamp voltage be maintained across the surge arrester while conducting surge current to ground. Turn-on voltage and associated turn-on time as well as clamp voltage are proportional to reverse standoff voltage. That is, an arrester with a low reverse standoff voltage has a lower turn-on voltage (and thus a faster turn-on time) and a lower clamp voltage than an arrester with a higher reverse standoff voltage. Therefore, it is important that the surge arrester has the lowest possible reverse standoff voltage.

(2) For effective protection, the reverse standoff voltage should be between 200 to 300 percent of nominal line-to-ground voltage of the appropriate ac service lines for a spark gap type surge arrester that is to be installed line to ground. The reverse standoff voltage should also be between 200 to 300 percent of nominal line-to-line voltage of appropriate ac service lines for a spark gap type surge arrester that is to be installed line to line. The reverse standoff voltage for MOV and ZNR type arresters should be 175 ± 25 percent of the nominal line-to-ground or line-to-line voltages of the appropriate ac service lines.

1.3.3.5.14 Desirable Operating Characteristics for Transient Suppressors. The transient suppressor characteristics listed below are required for effective protection at the facility level:

a. Turn-on (response) time: 50 nanoseconds or less.

b. Standoff voltage and leakage current: To ensure that the suppressor remains off except during transient occurrence, the standoff voltage should be between 200 to 300 percent above the nominal line voltage for spark gap type suppressors and approximately 175 ± 25 percent for MOV and ZNR type suppressors. Leakage current should not exceed 100 microamperes at standoff voltage.

c. Polarity: Bipolar or unipolar, depending on line voltage.

d. Turn-on voltage: 125 percent of standoff voltage maximum at one milliampere for MOV and ZNR type suppressors. Also, 125 percent of the standoff voltage for gas-filled spark gap suppressors.

e. Clamp voltage: (Also known as discharge voltage) should not exceed 200 percent of the turn-on voltage for transients 100 amperes peak or 225 percent of the turn-on voltage for transients 1000 amperes peak.

f. Operating life: Capable of dissipating number and amplitude of transients projected to occur over a lo-year period. See Section 1.3.3.5.17.

g. Self-restoring capability: Essential that suppressor automatically restores to off state when applied voltage drops below turn-on voltage.

1.3.3.5.15 Characteristics of Different Types of Surge Arresters. Various types of surge arresters are presently available for purchase as off-the-shelf items from a multitude of manufacturers. Most have desirable characteristics, and also have undesirable characteristics. Some types have the capability of dissipating tremendous amounts of current, but turn on relatively slowly (150 to 200 nanoseconds) after turn-on voltage appears across device terminals. Another type turns on more rapidly (50 nanoseconds or less) but will not dissipate as much current as the slower devices, unless many devices are connected in parallel which is not totally desirable. Solid-state arresters are available which have very fast turn-on times but most of them are limited in current dissipation capability except for expensive units that range in cost from $7,500 to $25,000. Several hybrid units are currently under development that consist of a solid-state suppressor for dissipation of low-energy transients, and a separate suppressor section for dissipation of high-energy transients. The two suppressor sections are normally separated by a choke in series with the protected phase line. The three most important characteristics of an ac surge arrester are the capability to dissipate the required levels of surge current, maintain a low discharge (clamp) voltage while dissipating the transient current, and a, fast response time. The fast response time is important to prevent the appearance of high level transient energy (overshoot voltage) across protected equipment for an intolerable length of time before the arrester turns on and clamps. Various types of suppressors are discussed below together with typical operating characteristics.

a. Gas-filled spark gap with series-connected silicon carbide block. The gas-filled spark gap arrester is capable of conducting very high currents. Some units have an extreme duty discharge capacity of 150,000 amperes peak for one transient with a 10-by-20 microsecond waveform. Minimum life of such units is dissipation of 2500 surges of 10,000 amperes peak surge current with a 10-by-20 microsecond waveform. Impulse sparkover (turn-on) voltage is 1400 volts peak for a transient with a 10 kV/ µs waveform for two types of arresters. Some typical discharge (clamp) voltages are listed in Table 1-12 for 10-by-20 microsecond waveforms of the transient amplitudes listed:

Table 1-12. Typical Maximum Clamp Voltage for Spark Gap Arresters

Peak Surge Amplitude	Maximum Clamp Voltage
10,000 Amperes	2,000 Volts
40,000 Amperes	3,000 Volts
150,000 Amperes	5,500 Volts

(1) Follow current. The typical discharge (arc) voltage across a spark gap is 20 to 30 volts while it is in full conduction. Because of the low arc voltage, the voltage and current available from the ac power supply would maintain the spark gap in an on state after a transient was dissipated until the first zero crossing of the power supply or until a supply line fuse opened, a line burned open, the spark gap burned open, or the service transformer burned open. For this reason, a silicon carbide block (nonlinear resistor) is connected in series with a spark gap to ground to ensure that the spark gap extinguishes on the first zero crossing of the connected line, and, more importantly, to limit follow current through the spark gap after a transient is dissipated until the first zero crossing of the powerline (8.3 milliseconds maximum). The silicon carbide block is a nonlinear resistance, and resistance decreases as applied voltage increases. Thus, the resistance is relatively high at powerline voltages to limit follow current, but decreases to a fraction of an ohm when high-level transient voltage is applied. However, the resistance remains high enough to generate a relatively high clamp voltage when discharging high-amplitude transient currents.

(2) Sparkover (turn-on) voltage. Sparkover time for the spark gap arrester is directly related to transient risetime since a finite amount of time is required for the spark gap to ionize and transition from the off mode through the glow region and into the are mode of operation. Also, ionization time is to some extent related to the risetime of the transient. Transition time from off to arc mode of operation is typically 150 to 200 nanoseconds after sparkover voltage appears across arrester terminals.

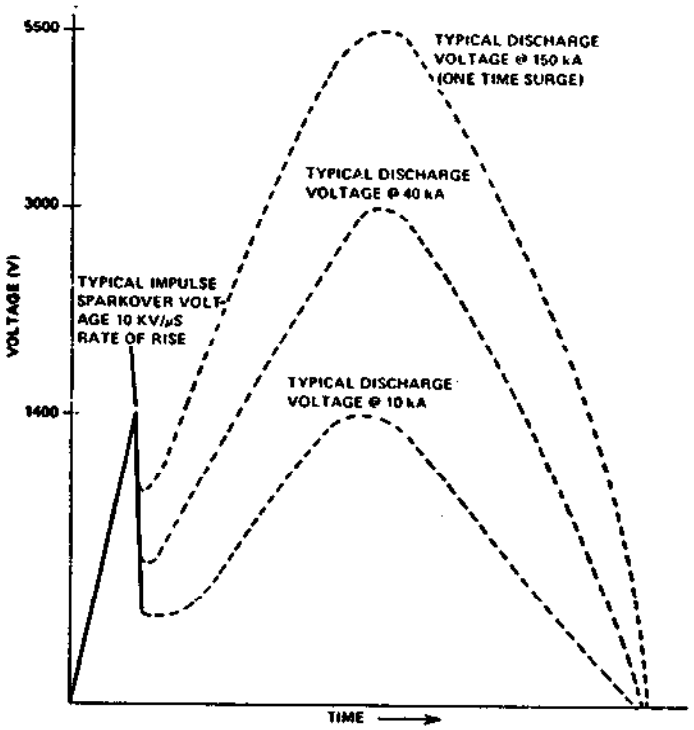

Figure 1-38. Typical Operating Curve for Two Series of Gas-Filled Spark Gap Arresters with Nonlinear Series Resistor

(3) Summary. In summary, the gas-filled spark gap is capable of discharging high-amplitude transients, but has a relatively slow response time and a relatively high discharge voltage. Follow current (10 to 80 amperes typical) occurs, but normally presents no significant problems. Figure 1-38 depicts typical operating curves for two series of gas-filled spark gap arresters with a series-connected silicon carbide resistor.

b. ZNR and MOV type arresters. The ZNR type arresters have several desirable characteristics. Other types of MOV arresters are currently under development that have voltage-current characteristics similar to the ZNR type. The ZNR type arresters have a relatively fast turn-on time (50 nanoseconds or less), low turn-on voltage, relatively low clamping voltage, and various levels of current dissipation capability since the ZNR types are available in different energy level packages. Table 1-13 lists related characteristics for ZNR available in one type of energy level package, and Table 1-14 lists related characteristics for a high-energy level package.

Table 1-13. ZNR Type Devices (Molded Case Type) Typical Characteristics

Parameter	Range of Available Devices		
	20 mm Disc	25 mm Disc	32 mm Disc
DC Breakdown Voltage at 1 Milliampere	200 to 910 Volts	200 to 910 Volts	200 to 910 Volts
Maximum Clamping Voltage at Maximum Surge Current	525 to 2800 Volts	590 to 3200 Volts	640 to 3800 Volts
Maximum Surge Current (8 x 20 Microsecond Waveform)	2.5 to 5 kA	5 to 10 kA	10 to 20 kA
Life	Depends on Surge Current and Waveform*		

*iMaximum surge current (8 x 20 microseconds) can be applied twice without incurring damage or over stressing the devices.

Table 1-14. High Energy ZNR Surge Arrester Typical Characteristics

Size:	Three 80 mm Discs in Parallel	
Powerline Voltage:	250 V AC Maximum	
DC Breakdown Voltage at 1 Milliampere:	560 Volts	
Maximum Clamping Voltage: (10 x 20 Microseconds)	Current	Clamping Voltage
	10 kA	1300 Volts
	40 kA	1600 Volts
	150 kA	2450 Volts

Table 1-15. Test Results for Parallel-Connected ZNR

Number of Surges Applied	Surge Amplitude	Clamp Voltage (Peak)
2000	250A @ 1OOOV	300V
2500	400A @ 1600V	315V
225	20, OOOA @ 8.75kV	500V
25	40,OOOA @ 16.8kV	650V
8	50, OOOA @ 20kV	700V

(1) Current dissipation. Testing has established that connection of the devices listed in Table 1-13 in parallel for line-to-ground or line-to-line protection is feasible. Use of the ZNR in parallel provides increased current dissipation capability and a lower maximum clamping voltage than a single, high-energy ZNR can provide. Five of the devices were connected in parallel and surged as listed in Table 1-15. The clamp voltages listed in Table 1-15 occurred. Current division was very good.

(2) Turn-on. Although the ZNR devices used in ZNR-type arresters are not solid-state junction-type devices, the arrester acts very much like junction-type devices. That is, when breakdown voltage is reached, transition from off to on occurs very rapidly as shown in Figure 1-39b which is a typical operating curve for a ZNR. Since the devices used in ZNR-type surge arresters are essentially nonlinear resistors, resistance decreases rapidly as applied voltage across the device increases above breakdown voltage. Therefore, current flow through this type of arrester increases rapidly after breakdown as shown in Figure 1-39b. Primarily because of resistance and capacitance of the ZNR, the clamp voltage slightly lags the transient current waveform. The ZNR-type arrester automatically restores to the off state when applied voltage falls below turn-on voltage. Therefore, no follow current occurs during the turn off phase.

c. Solid-state type arresters. So many different types of solid-state arresters are currently manufactured that it is difficult to generally evaluate them. In general, solid-state arresters manufactured by connecting silicon avalanche diode suppressors (SAS) in series to attain the desired current handling capability have truly fast response times of 1 to 10 nanoseconds. However, this type of arrester is generally limited to handling approximately 500 amperes surge current (waveform 8-by-20 to 8-by-40 microseconds). Figure 1-39a is a typical operating curve for a solid-state suppressor. This type of arrester also has a low clamp voltage (normally 160% of breakdown voltage, maximum) compared to other types of arresters. Other solid-state arresters are a combination of silicon avalanche diodes or rectifier diodes connected in a bridge network followed by a second stage consisting primarily of a silicon-controlled rectifier (SCR) with a varyingvalue current-limiting resistor in series with the SCR. This type arrester has a slow response time, sometimes approaching 1 microsecond, because of the slow turn-on time for the SCR. Also, the clamping voltage can be

high depending on the value of the SCR current-limiting resistor. Because of the proliferation of solid-state arresters available, it is strongly recommended that complete laboratory demonstration testing be required prior to implementation of the solid-state arresters.

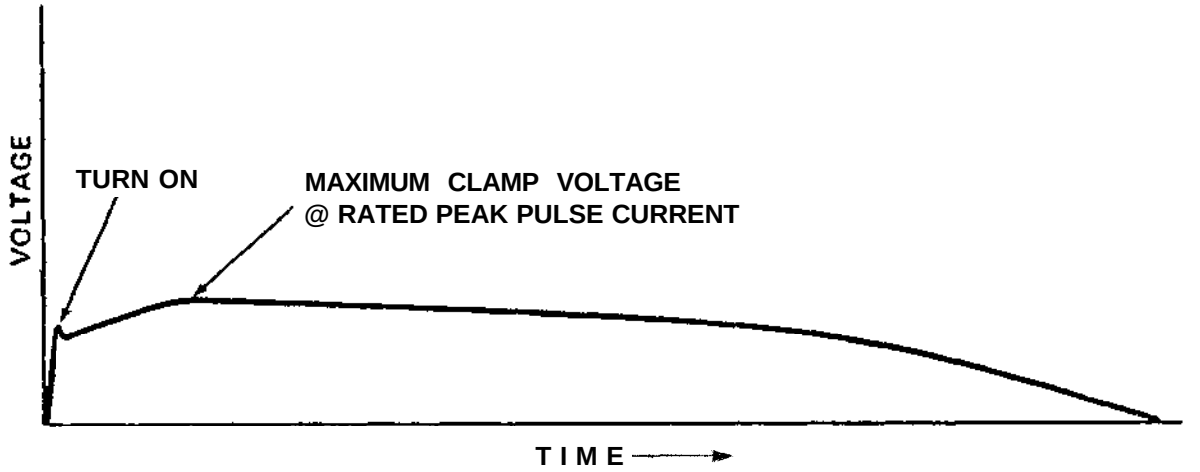

a. TYPICAL OPERATING CURVE FOR SILICON AVALANCHE SUPPRESSOR

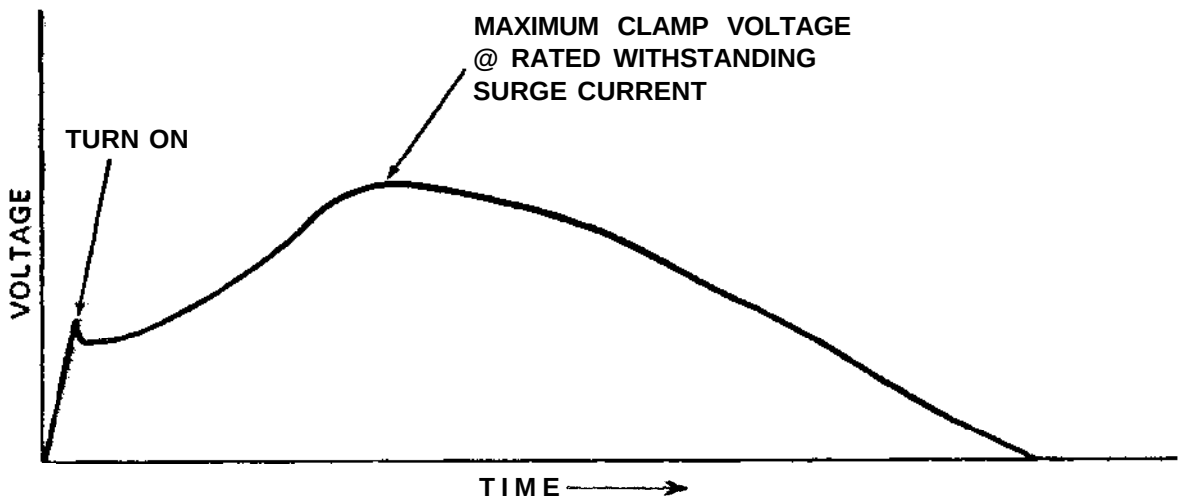

b. TYPICAL OPERATING CURVE FOR ZNR SUPPRESSOR

Figure 1-39. Typical Arrester Operating Curves, ZNR and SAS

d. Hybrid type arresters. Hybrid type arresters are currently in development that consist of a combination of gas-filled spark gaps and ZNR or MOV, and two-stage arresters consisting of a solid-state stage for dissipation of low-energy-content transients and a separate stage for dissipation of high-energy transients consisting of gas-filled spark gaps and ZNR or MOV. The two stages are separated by a very low dc resistance choke so that the low-energy dissipation stage fires first to achieve fast response time. When sufficient voltage develops across the choke, the high energy dissipation stage turns on and dissipates the high level transient energy. Insufficient data currently exists to support analyzing the hybrid type arresters. A hybrid should emerge that effectively utilizes the best characteristics of available devices, (e.g., the fast turn-on and low clamping voltage characteristics of silicon avalanche diode suppressors and the high current dissipation capability of ZNR or MOV and gas-filled spark gaps).

1.3.3.5.16 Transient Protection for Externally Exposed Equipment Lines. In order to effectively protect equipment against damage from lightning generated transients on externally exposed (outside) equipment lines, the following must have some definition which is provided in subsequent paragraphs.

a. Frequency of Transient Occurrence.

b. Amplitude and Waveform of Occurring Transients.

c. Equipment Withstand Levels.

d. Protection Methods Against Transients.

1.3.3.5.17 Frequency of Transient Occurrence. There is no existing method for precise calculation of the number of lightning generated transients that will occur at a specific location in a given period of time. However, by using the best available data listed in Section 1.3.3.5.4, projections are that 1750 transients will occur in a lo-year period at a facility located in a high-lightning incident area with an average of 100 thunderstorm days per year, and only 175 transients will occur in a lo-year period at a facility in a low-incident lightning area with an average of 10 thunderstorm days per year. Note that the number of transients is decreased by one order of magnitude for the low-lightning incident area. Therefore, by using Figure 1-34 to determine the average number of thunderstorm days per year in a specific location, and decreasing 1750 by 10% for each 10 decrease in the average number of thunderstorm days per year, the number of transients projected to occur at any location in the United States can be determined.

Table 1-16. Transients Projected to Occur on Externally Exposed Line in High-Lightning Incident Area Over 10-Year Period

No. of Transients	Percentage	Peak Voltage (Volts)	Peak Current (Amperes)
2	0.1	750 to 1,000	750 to 1,000
15	0.9	500 to 749	500 to 749
18	1	400 to 499	400 to 499
53	3	300 to 399	300 to 399
140	8	200 to 299	200 to 299
332	19	100 to 199	100 to 199
420	24	50 to 99	50 to 99
403	23	25 to 49	25 to 49
367	21	5 to 24	5 to 24

Note: The source impedance for design purposes is assumed to be 1 ohm.

1.3.3.5.18 Amplitudes and Waveforms of Occurring Transients. Transients occurring on landlines have been defined as 10-by-1000 microsecond, 1000-volt peak pulses where 10 microseconds is the time from the start of the transient to peak voltage, and 1000 microseconds is the time from the start of the transient until the amplitude exponentially decays to 50% of peak value. Source impedance cannot be precisely defined but for design purposes is assumed to be 1 ohm. Therefore, for design purposes, a typical worse case lightning-induced transient can be defined as 10-by-1000 microseconds, 1000 volts peak with a peak surge current of 1,000 amperes. Using Table 1-8, the 1750 transient pulses defined in Section 1.3.3.5.17 and the worst case transient pulse defined above, the number of transients of varying amplitude would be as listed in Table 1-16 over a lo-year period for an externally exposed line in a high-incident lightning area (average of 100 thunderstorm days per year).

1.3.3.5.19 Equipment Withstand Levels. Equipment withstand levels were generally defined in Section 1.3.3.5.3. Nothing of substance can be added. However, manufacturers generally do not specify equipment or component withstand levels against lightning generated transient surges. It is imperative that the withstand level be analyzed and determined for each item of equipment to be protected. The withstand level should be 10% below both the damage threshold level and operational upset level for the equipment. The damage threshold level is defined as the level where immediate component destruction occurs or the repeated application energy level that decreases useful operating lifetime of equipment components, whichever is lower. The operational upset level is defined as the transient voltage that causes an intolerable change in equipment operation. It is imperative that an accurate withstand level be established. Otherwise, designed transient suppression may not be effective, or conversely, costly transient protection may be designed when not required.

1.3.3.5.20 Protection Methods Against Transients. Methods listed below are effective, when properly implemented, in providing equipment protection against lightning generated transients appearing on externally-exposed equipment signal, status, control and ac and dc intrafacility lines. Subsequent paragraphs delineate proper implementation techniques for the listed methods.

a. Completely enclosing buried lines end-to-end in ferrous metal, watertight conduit.

b. Installation of buried guard wire above buried cable runs not in metal conduit.

c. Connecting transient suppressors line-to-ground on both ends of externally exposed equipment lines as soon as feasible after building penetration or at point of termination at exterior equipment.

d. Including transient suppressors or transient suppression circuits as an integral part of protected equipment at all external line-equipment interfaces.

e. Peripherally bonding the shields of rf coaxial lines to building entry plates by use of bulkhead connector plates.

1.3.3.5.21 Enclosing Cable Runs in Ferrous Metal Conduit. Transients are induced on external lines by electromagnetic waves created by lightning current flow, and by cloud-to-cloud lightning discharges. Therefore, completely enclosing buried external cable runs in ferrous metal, watertight, electrically continuous conduit provides an effective protection level against lightning-generated transients.

a. Cost considerations. When a buried cable run is 90 meters (300 feet) or less in length, it is economically feasible to enclose the cable run end-to-end in metal conduit. When the cable run exceeds 90 meters (300 feet), it is normally more economically feasible to provide transient suppression at building penetration and equipment level than to install the conduit. However, use of metal conduit provides effective protection against induced transients, regardless of the length of the cable run. The conduit must extend from building penetration to building penetration, or building penetration to exterior equipment termination.

b. Grounding of conduit. To be effective, the conduit must be electrically continuous and effectively bonded to earth ground at each end. If building entry plates are available the conduit should be peripherally welded. No. 2 AWG bare copper stranded cable is suitable for the earth ground connection, and exothermic welds provide effective bonding underground. Approved pressure connectors are suitable for use above ground. For runs over 90 meters (300 feet), the conduit should be connected to earth ground at each end and every 30 meters (100 feet). The structural steel of antenna towers may be used to effectively ground the conduit provided the total bond resistance from the conduit to the earth electrode system is 5 milliohms or less.

c. Transient suppression for lines in metal conduit. Only one level of transient suppression is required for exterior line/equipment interfaces to provide effective protection against induced transients conducted by lines in metal conduit. The one level of suppression may be located at building penetration or designed as an integral part of the applicable equipment. The one level of suppression may consist of a single suppressor connected line to ground, or two resistors connected in series with the external line input and a silicon avalanche diode connected between the junction of the two resistors and earth ground or equipment case ground, depending on location of the transient suppression.

d. Amplitude of transients on external lines enclosed in metal conduit. The number of lightning generated transients occurring on external cables will not change as a result of enclosing cable runs in metal conduit. However, the voltage and current amplitudes will decrease a minimum of 90%. Therefore, Table 1-16 can be used to determine the number and amplitude (voltage and current) of transients that are projected to occur on externally exposed lines, enclosed in metal conduit, in high-lightning incident areas.

1.3.3.5.22 Transient Suppression. In order to provide effective equipment protection against lightning generated transients, externally exposed lines must have transient suppression installed on each end where the line directly interfaces electrical/electronic equipment. This requirement applies in all cases when the withstand level of the interfaced equipment is below the transient levels projected to occur at the line/equipment interface. As previously noted, transient amplitudes projected to occur on lines enclosed end-to-end in electrically continuous, ferrous metal conduit are only 10% of the transient amplitudes projected to occur on lines not enclosed in metal conduit (Table l-16). Primarily because of insertion losses and impedance mismatch, transient suppression is not currently available that is satisfactory for installation on externally exposed rf coaxial lines at building penetration when the lines carry signals above 3 MHz in frequency. Therefore, all protection for these line/equipment interfaces must be designed as an integral part of the equipment. The most effective design for equipment protection is provided by installing a high energy level transient suppressor at building penetration (on all lines that carry signals 3 MHz or less in frequency) connected line to earth ground, and including low-energy suppression as a part of integral equipment design. Figure l-40 depicts typical transient suppression at the facility and equipment level for both coaxial cables and single wires or pairs. Suppressors installed at building penetration should be located in the junction box that first terminates the externally exposed lines after building penetration.

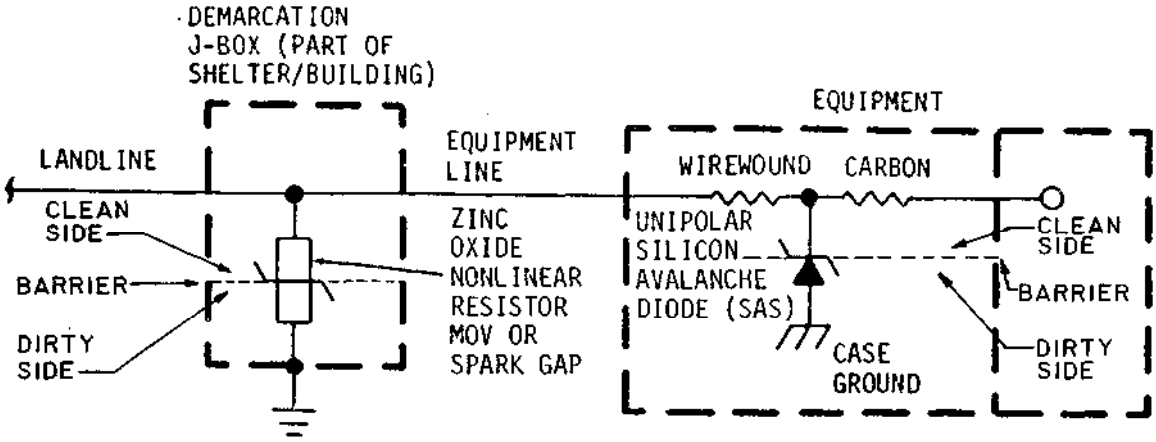

NOTE: SAS MAY BE UNIPOLAR OR BIPOLAR DEPENDING ON LINE VOLTAGE

a. TYPICAL TRANSIENT PROTECTION CONFIGURATION

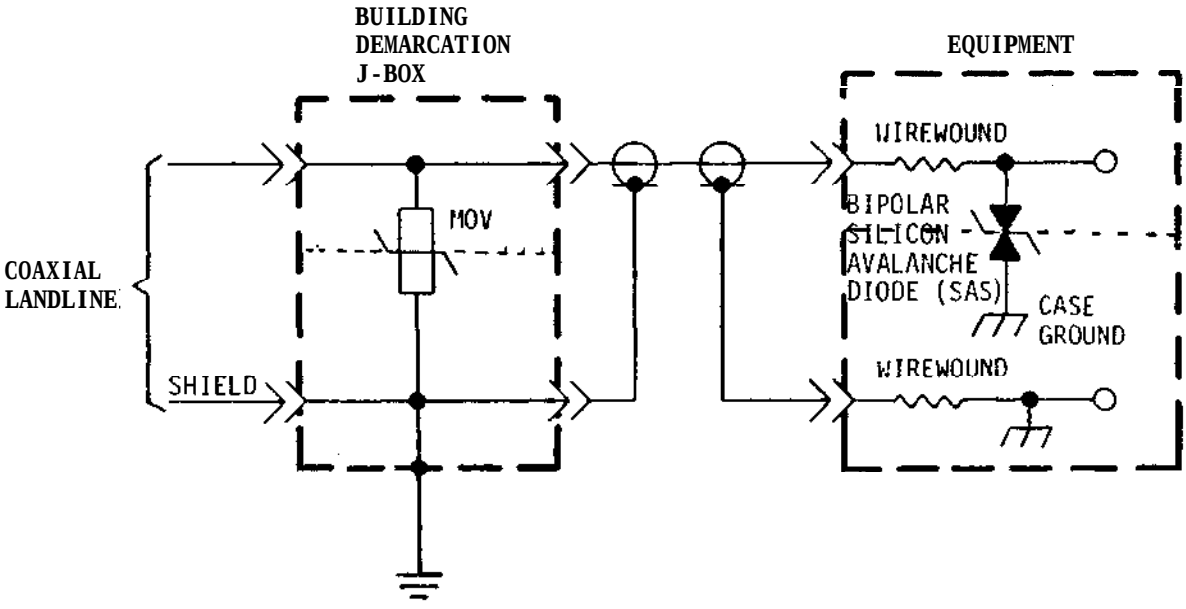

NOTE: TRANSIENT PROTECTION FOR SHIELD REQUIRED ONLY WHEN SHIELD IS NOT GROUNDED AT EQUIPMENT

b. TRANSIENT PROTECTION FOR EXTERNALLY-EXPOSED COAXIAL CABLES

Figure l-40. Typical Transient Suppressor Installation, Facility and Equipment Level

a. Grounding for transient suppression. In order for the transient suppression to operate properly and provide optimum equipment protection, the ground side of the transient suppressor must be connected as directly as possible to ground. The ground for the high-energy level suppressor must be connected directly to the nearest J-Box wall.

b. Suppressor installation. Suppressors can be installed between applicable terminal boards and the ground with short direct connections. Maintaining short lead lengths is important to prevent inductance of long lead lengths from delaying turn-on and response of the transient suppressors.

1.3.3.5.23 Types of Available Transient Suppressors. Three different types of suppressors are available to provide transient protection as listed below. Operating characteristics for each type are provided in subsequent paragraphs, followed by desirable operating characteristics.

a. Zinc oxide nonlinear resistor (ZNR) or metal oxide varistor (MOV).

b. Silicon avalanche diode suppressor (SAS).

c. Gas-filled spark gap.

1.3.3.5.24 Operating Characteristics of Transient Suppressors.

a. Characteristics of ZNR-type suppressors.

(1) Response time: 50 nanoseconds or less, any risetime.

(2) Clamping voltage: 225% of breakdown voltage maximum for surge currents projected.

(3) Breakdown voltage: 22 V dc to 1800 V dc at 1 milliampere.

(4) Standoff voltage: 14 V dc to 1599 V dc.

(5) Surge current dissipation: 500 to 2000 amperes, 8-by-20 microsecond waveform.

(6) Lifetime: Variable, depends on amplitude of surge current, satisfactory for 10-year protection, projected.

b. Characteristics of SAS-type suppressors.

(1) Response time: 1 nanosecond or less, any risetime.

(2) Clamping voltage: 165% of breakdown voltage maximum at rated peak pulse current.

(3) Breakdown voltage: 6.8 V dc to 200 V dc at 1 milliampere.

(4) Standoff voltage: 5.5 V dc to 200 V dc.

(5) Surge current dissipation: Peak pulse current ratings from 139 amperes for 6.8 V dc suppressor to 5.5 amperes for 200 V suppressor for 10-by-1000 microsecond waveforms.

(6) Lifetime: Not presently defined. Requires current-limiting resistor in series with protected line to provide required surge current dissipation at facility level.

c. Characteristics of gas-filled spark gap suppressors.

(1) Response time: 3 to 5 microseconds for 10-by-1000 microsecond waveforms.

(2) Clamping voltage: Arc voltage is 20 volts typical.

(3) Breakdown voltage: 300 to 500 volts typical.

(4) Standoff voltage: 75 V dc to 1000 V dc.

(5) Surge current dissipation: 5,000 amperes for 10-by-50 microsecond waveform.

(6) Lifetime: Varies depending on surge current amplitude, 50 surges of 500 amperes peak current with 10-by-1000 microsecond waveform typical.

1.3.3.5.25 Transient Suppressor Packaging Design. Packaging of transient suppressors for standard wires and twisted shielded pairs is not critical. Leads should be as short as feasible to enable short, direct connections without bends. Transient suppressors for coaxial and twinaxial lines should be contained in a metal and epoxy package with appropriate connectors on each end, one male, and one female, to permit inline installation at the connector panel in the demarcation junction box. Two suppressors must be included in all twinaxial protector packages.

1.3.3.5.26 Coaxial Cable Shield Connection Through an Entrance Plate. Effective transient protection can be provided by peripherally bonding each rf coaxial cable to a metal bulkhead connector which in turn is peripherally bonded to the building entry plate and grounded to the earth electrode subsystem. This scheme will route transient currents from cable shields to earth ground instead of through terminating equipment to ground.

Also, transient surge currents will be shunted to ground before transient energy is cross-coupled to other equipment lines in the facility. The entry plate should be a minimum of 0.64 cm (1/4-inch) thick, and constructed of steel. The entry plate must contain the required number of appropriate coaxial feedthrough connectors to terminate all applicable incoming lines. The connectors must also provide a path to ground for connected cable shields. If external and internal coaxial cables are of a different physical size, the changeover in connector size should be accomplished by the feedthrough connectors of the entry plate. The entry plate should be connected to the earth electrode subsystem with a 1/0 AWG (minimum) insulated copper cable. The cable should be bonded to the entry plate and the earth electrode subsystem with exothermic welds.

1.3.3.5.27 Grounding of Unused Wires. All unused wires/pairs of communication cable runs should be connected to ground at each end. This action will reduce transients on the unused lines which otherwise could be coupled to in-service lines of the cable.

1.3.3.5.28 Transient Suppression for RF Coaxial Lines. At the present time, effective transient suppressors for connection from line-to-ground at building penetration for externally exposed rf coaxial lines carrying signals above the 3 MHz range are still in the development stage, primarily because of insertion losses. The best method for protecting the lines at present is end-to-end enclosure in ferrous metal conduit, and providing transient suppression as an integral part of using equipment.

1.3.3.5.29 Equipment-level Transient Suppression. Equipment-level transient protection is discussed in paragraph 1.3.3.7 of this chapter. In general, effective protection is provided by low-value resistors in series with external line inputs, and silicon avalanche diode suppressors connected line-to-ground. Suppressors are currently available as special order items that are suitable for connection line-to-ground on rf lines carrying signals up to 500 MHz. The suppressors consist of a spark gap, a silicon avalanche diode suppressor in parallel with an rf choke, or a combination ZNR and rf choke.

1.3.3.6 Lightning Generated Transient Protection Evaluation. This portion of the procedure is performed to determine whether effective and adequate transient suppression is provided for protection against damage from lightning-generated transients. The procedure consists of a detailed review of facility drawings and a detailed visual inspection.

a. Facility drawings. Review facility drawings required to determine the following. Sketch items of interest to aid in subsequent visual examination.

(1) Are lightning protectors installed on the primary and secondary of commercial ac service transformer(s)?

(2) Are buried, incoming ac power service lines enclosed in watertight, ferrous metal conduit connected to earth ground at the service transformer and to the earth electrode subsystem at the facility end? Is No. 2 AWG (minimum) bare, stranded copper wire used for earth ground connections?

(3) Are overhead incoming ac power service lines protected by an overhead guard wire from the service transformer to the facility service entrance? Is the guard wire connected to earth ground at each end? Does the guard wire provide a 1:1 cone of protection for the incoming service lines?

(4) Is an ac surge arrester installed at the facility main service disconnect means (each main disconnect if more than one)? Note manufacturer and part number on sketch.

(5) Are the external landlines and lines which terminate at exterior equipment (including rf coaxial lines that connect to facility equipment) enclosed in watertight, ferrous metal conduit if the cable runs are 90 meters (300 feet) or less in length? Is the conduit connected to the applicable earth electrode subsystem at each end?

(6) Do buried landlines (more than 90 meters (300 feet) in length and not enclosed in ferrous conduit) have a guard wire installed end-to-end in the cable trench? Is the guard wire connected to the earth electrode subsystem at each end?

(7) Are all rf coaxial cables grounded to the metal bulkhead connector plate at building penetration?

(8) Are transient suppressors or transient suppression circuits installed line-to-ground on each end of all exterior lines not enclosed in ferrous metal conduit (except rf lines carrying signals above 3 MHz) at first termination after building penetration?

b. Inspection. A survey form in Section 2.2.2.4, Part II, is provided for guidance in accomplishing a thorough visual inspection. Detailed written notes fully describing all noted deficiencies should be made.

c. Corrective action. Specific corrective action to accomplish in response to each noted deficiency is difficult to detail. For instance, cable runs less than 90 meters (300 feet) in length are not normally enclosed end-to-end in electrically continuous, watertight, ferrous metal conduit. Intensity and incidence of lightning in the immediate area, together with economic feasibility and operational requirements, are normally the overriding factors in determining whether the installation of metal conduit is justified and feasible. In most cases, for the example cited, installation of transient suppression circuits on each end of externally exposed equipment lines is the most feasible solution. However, installation of transient suppression directly at the line-equipment interface may also be warranted, depending on equipment susceptibility and lightning incidence. Consider each deficiency individually. Refer to Sections 1.3.3.5 and 1.3.3.7 as required, and correct deficiencies in the most feasible manner. Some typical and required corrective actions are listed below:

(1) If a secondary ac surge arrester is not installed at the facility, and there is any history of lightning incidence in the area, install a surge arrester on the line or load side of the main service disconnect means. Refer to Section 1.3.3.5 to determine that the surge arrester selected will be adequate and effective.

(2) If the surge arrester and transient suppressor does not have a low-impedance, effective path to earth ground, take whatever action is necessary to provide effective grounding. Neither the arrester nor suppressor will provide effective transient protection if an effective ground is not available.

(3) If no transient suppressors are installed on externally exposed equipment lines not enclosed end-to-end in metal conduit, and the lines interface susceptible equipment, as a minimum install transient suppressors on each end of each line that interfaces susceptible equipment. Refer to Sections 1.3.3.5 and 1.3.3.7 as required.

1.3.3.7 Transient Protection.

1.3.3.7.1 Protection Requirement. Individual items of electrical and electronic equipment that directly interface any externally exposed equipment lines, including commercial ac, may require transient protection that is designed as an integral part of the equipment. Whether or not protection is required is dependent on the damage susceptibility of the equipment of interest, the level of transient suppression provided on externally exposed lines at building penetration or external equipment termination and the level of transient energy that is projected to be conducted to the equipment. For use herein, externally exposed lines are defined as lines exposed to outside weather elements and environmental conditions. The lines may run overhead, run along grade surface, or be buried in earth. Included are ac power input lines and signal, control, status, and intrafacility powerlines. The lines are commonly referred to as landlines. Transient protection is not required in equipment when an interfaced landline is fiber optic in lieu of a metallic line. In order to provide effective transient protection, the damage (withstand) level for the equipment must be determined, and the amplitude and number of transients that will be conducted to the equipment must be known. This information is provided in this section. Three areas of equipment circuitry normally require transient protection, and are listed below:

a. The ac power input.

b. Where other externally exposed lines interface with the equipment.

c. Rectifier outputs of 5 to 48 V dc power supplies that operate from commercial ac power and supply operating power for solid-state equipment.

1.3.3.7.2 Transient Definition. The waveform and amplitude of transients that may appear on commercial ac input lines and other landlines connected to equipment are provided in this paragraph.

a. AC powerline transients. The number and amplitude of lightning generated transients projected to occur on ac power inputs to equipment over a 10-year period are listed in Tables 1-17 and 1-18. The waveform for the transients is 8-by-40 microseconds where 8 microseconds is the risetime from zero to peak amplitude, and 40 microseconds is the time from the start of the transient until exponential decay to 50% of peak value. The transients listed are based on the data in Section 1.3.3.5. The transients listed in the two tables represent clamp voltages that will appear across equipment by the facility secondary ac arrester installed at the main service disconnect means (see Section 1.3.3.5) when discharging transient surges. Voltages and currents actually appearing across protected equipment will necessarily be related to the amounts and type of equipment operating from power supplied by the main service disconnect means.

Table 1-17. Transient Surges, Line-to-Ground, Expected to Appear Across Equipment by Secondary AC Surge Suppressor Over a 10-Year Period

Surge Current Amplitude (8-by-40 µs)	Number of Surges
1.5 kV, 100 A	1,500
2 kV, 200 A	700
2.5 kV, 300 A	375
3 kV, 500 A	50
3.5 kV, 1 kA	5
4 kV, 1.5 kA	2
4.5 kV, 2 kA	1

Table 1-18. Transient Surges, Line-to-Line, Expected to Appear Across Equipment by Secondary AC Surge Suppressor Over a 10-Year Period (Ungrounded Service Only)

Surge Current Amplitude (8-by-40 µs)	Number of Surges
500 V, 50 A	1,000
750 V, 100 A	100
1 kV, 200 A	50
1.5 kV, 300 A	10

b. Landline transients. The number and amplitude of transients projected to be conducted to each landline equipment interface are listed in Table 1-19. The waveform for the transients is 10-by-1000 microseconds where 10 microseconds is the risetime from zero to peak amplitude for the transient, and 1,000 microseconds is the time from the start of the transient until exponential decay to 50% of peak amplitude. The information presented in Table 1-19 is based on data contained in Section 1.3.3.5. Since an equipment designer will not normally know whether external lines will be enclosed in ferrous metal conduit, different transient amplitudes are not provided in Table 1-19 for external lines enclosed in metal conduit.

1.3.3.7.3 Determination of Equipment Damage (Withstand) Levels. Manufacturers do not normally specify withstand levels for components. Therefore, an analysis should be performed to determine the withstand level for each item of equipment that directly interfaces any externally exposed lines including ac input lines. Transients that are projected to be conducted to equipment are provided in Tables l-17, 1-18, and 1-19. The analysis should be based either on results of laboratory tests or engineering analysis. Also the analysis must include all equipment circuitry that will be exposed to transients. Three factors determine the withstand level for the equipment as follows:

a. Component destruction level. The component destruction level is the transient energy level that either causes immediate component destruction or degrades component operation to a point so that useful operation cannot be achieved. This energy level is not usually specified or controlled by the manufacturer.

b. Shortened component operating life. Useful component operating life can be appreciably shortened by repeated overstressing of components. The overstressing occurs as a result of repeated application of some level of transient energy. This energy level may be difficult in some cases to determine, but is certainly meaningful when designing protection against transients.

Table 1-19. Transient Surges Projected to Occur in 10-Year Period on Externally-Exposed Landlines

Peak Amplitude Number of Surges	(Voltage and Current)
1,000	100 V, 50 A
500	500 V, 100 A
50	750 V, 375 A
5	1,000 V, 1,000 A

c. Operational upset level. The operational upset level is the transient energy level that causes a change in the equipment operating state. Since a change in the equipment operating state will normally create an intolerable change in associated system operation, transient protection must ensure that transient energy levels appearing across protected equipment do not cause operational upset.

To establish the equipment withstand level, compare the transient energy levels that cause immediate component destruction, component overstressing, or equipment operational upset. Select the lower of the three transient energy levels, and establish the withstand level at 10% below the lowest transient energy level.

1.3.3.7.4 Determination of Need for Transient Protection. Power supplies (5 to 48 V) operating from ac inputs and supplying operating power for solid-state equipment always require internal transient protection. Other equipment that directly interfaces externally exposed lines, including commercial ac inputs, may or may not require transient protection designed as an integral part of the equipment. To determine whether transient protection is required, compare the equipment withstand level with the transients of Table 1-17, 1-18, or 1-19, as applicable. If the equipment withstand level is above the transient amplitudes provided in the tables, equipment-level transient protection is not required. When the transient amplitudes are above the equipment withstand level, equipment-level transient protection is required, either at the ac input, other externally-exposed line-equipment interfaces, or both.

1.3.3.7.5 Minimizing Transient Damage. When equipment requires protection against lightning generated transient damage, transient suppression design must ensure that transients are attenuated to the equipment withstand level prior to entering any equipment component. Therefore, the transient suppression must be effective at the external line-equipment interface.

a. New equipment.

(1) AC inputs. The most feasible method for providing transient suppression is to design the suppression as an integral part of the equipment.

(2) Other external line interfaces (dc to 3 MHz). The most effective method for providing transient suppression is to design low-energy level transient suppression as an integral part of the equipment and specify that high-energy level transient suppression, of a design provided by the manufacturer, be installed on applicable lines in cable demarcation junction boxes at building penetration or exterior equipment termination. Total transient suppression may be designed as an integral part of the equipment but caution must be exercised to ensure that a separate, dedicated path to earth ground be provided for the high-energy level dissipation section of the transient suppression.

(3) External line interfaces (above 3 MHz). All transient suppression must be designed as an integral part of the applicable equipment. This is necessary because effective suppression devices/circuits are not currently available for in-line installation on rf lines above 3 MHz, primarily because of high insertion losses. If useable, effective high-energy level suppression becomes available in the future, the most effective transient protection can be realized by installing high-energy level suppression on applicable lines at a metal bulkhead connector plate at building penetration and including low-energy transient suppression as a part of the equipment.

b. Existing equipment. The most effective transient protection can be provided as described in a(l), (2), and (3) above. When room is not available in the existing equipment to add required transient suppression components, the components can be installed in a small enclosure affixed to the chassis or cabinet rack for all except rf lines that carry rf signals above 3 MHz.

1.3.3.7.6 AC Power Input. The clamp voltage, appearing across protected equipment by the secondary ac surge arrester installed at the facility main service disconnect means, when dissipating a transient surge, may be higher than the withstand level for the equipment. Therefore, effective transient suppression must be designed as an integral part of the equipment.

a. Transient suppression design. To provide effective protection, equal suppression must be installed line-to-ground on each service conductor input and the neutral input. For floating (ungrounded) line-to-line power inputs, line-to-ground suppression must be installed and line-to-line suppression is optional. Suppressors installed at the equipment power input should have a slightly lower turn-on voltage and a slightly faster response time than suppressors of the secondary ac surge arrester at the main service disconnect means. This permits the suppressors integral to the equipment to clamp short-duration overshoot voltage that occurs before the secondary ac surge arrester can turn on and clamp in response to a transient. Also, with a lower turn-on voltage, the suppressors at the equipment will have a lower clamp voltage for a given transient surge than the secondary arrester and thus provides optimum equipment protection. However, with the specified characteristics, the surge suppressors at the equipment will tend to dissipate the occurring transient before the secondary arrester turns on. Therefore, it is imperative to have an inductor or a minimum 10 foot cable added in series with the input line. If the inductor is properly chosen, the secondary surge arrester may then turn on very rapidly after the equipment suppressor(s) turn on because of the voltage increase across the inductor. The voltage increase is caused by current drain through the equipment suppressors to ground. Figure 1-41 depicts a typical suppression circuit for use at the equipment level on ac inputs with a neutral. Figure l-42 depicts a typical suppression circuit for use on ungrounded (line-to-line) inputs.

b. Components.

(1) Inductor Ll. The inductor Ll, shown in Figures 1-41 and l-42, is necessary to provide a voltage increase to cause the secondary ac surge arrester at the main service disconnect means to turn on very rapidly when suppressor RVl turns on and conducts transient current to ground. The inductor must be capable of safely passing normal operating voltages and current, and current resulting from 130% overvoltage for a period of 50 milliseconds. Also, the inductor must:

(a) Have a very low dc resistance.

(b) Present a high impedance to transient surges.

(c) Present a very low impedance to 60 Hz line voltage.

(d) Be capable of safely passing the transient current listed in Table 1-17.

(2) Suppressor RVl. Figure 1-41 shows RVl as a metal oxide varistor (MOV) because the zinc oxide nonlinear resistor type of MOV is especially well suited for this particular application. Other types of MOV are constantly being upgraded and are now possibly suitable for use. Other devices are also suitable for use, and, in some cases will be required. Silicon avalanche diodes are effective for use in protecting very susceptible equipment. Data for different type suppressors are provided in Section 1.3.3.5. Use of a gas-filled spark gap for use at the location of RVl is not recommended for two reasons.

(a) Available gas-filled spark gaps with the required current handling capability have a relatively high sparkover (turn-on) voltage and relatively slow turn-on times. Therefore, if spark gaps are used for transient suppression at ac inputs, additional suppression including inductors, MOV and/or silicon avalanche diode suppressors must be added to provide required protection.

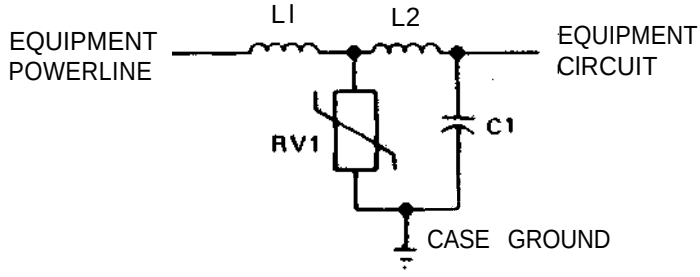

a. TYPICAL TRANSIENT SUPPRESSION FOR HOT AC INPUT TO EQUIPMENT

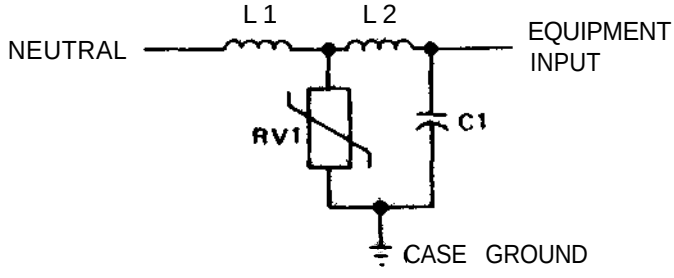

b. TYPICAL TRANSIENT SUPPRESSION FOR NEUTRAL AC INPUT TO EQUIPMENT

Figure 1-41. Typical Configuration for Protection of Equipment From Conducted Powerline Surges and Transients (Neutral Grounded)

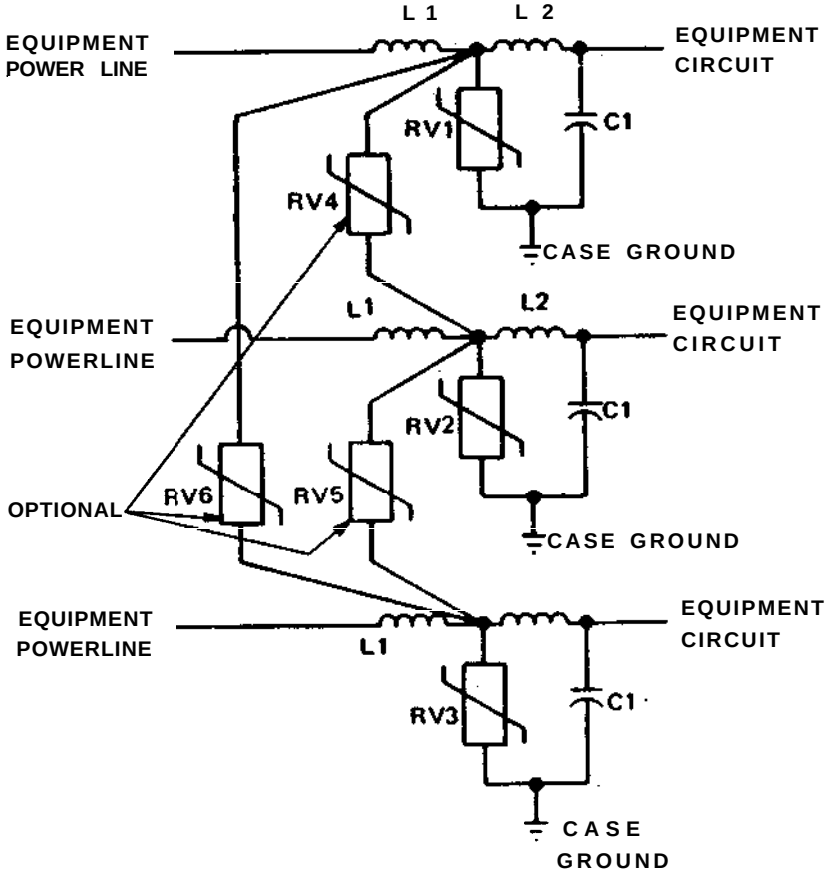

Figure 1-42. Typical Configuration for Protection of Equipment from Conducted Powerline Surges and Transients (Ungrounded)

(b) Arc voltage for spark gaps is a nominal 20 to 30 volts. Therefore, when the transient occurs causing the spark gap to turn on, normal line voltage is interrupted which will usually cause operational upset of the affected equipment. Also, since the arc voltage is only 20 volts and is across a 120-volt supply, the spark gap will likely remain in the arc mode of operation and draw current until the supply voltage waveform crosses zero or until the supply circuit breaker opens. It is likely that the spark gap will be destroyed before the supply circuit breaker opens. Either condition is very undesirable.

(3) Inductor L2 and capacitor Cl. These two components form an LC network to filter out high frequency components of transient surges and are required only for equipment susceptible to high frequency, very short duration (less than 1 nanosecond) transient pulses that might pass across RVl.

c. Transient suppression grounding. When at all feasible, transient suppressor grounds should be directly bonded to case ground. When the direct bond is not feasible, the suppressor grounds must be connected as short and direct as possible to case ground, and the case must have a low bond resistance to earth ground. Otherwise, the suppressors cannot operate properly.

d. Functional characteristics. Functional characteristics for transient suppression at the ac input-equipment interface must be as follows for effective transient suppression.

(1) Voltage characteristics. The operating (reverse standoff) voltage must be between 200 to 300 percent of the normal line voltage for gas-filled spark gap suppressors. For MOV, ZNR, and SAS type suppressors, the reverse standoff voltage should be 175 ± 25 percent of the normal line voltage. Turn-on voltage, discharge (clamp) voltage and the amplitude and time duration of any overshoot voltage must be sufficiently low to preclude equipment damage or operational upset.

(2) Leakage current. Leakage current. for each suppression component at reverse standoff voltage must not exceed 100 microamperes.

(3) Self-restoring capability. The surge suppressors must automatically restore to an off state when transient voltage falls below turn-on voltage for the suppressor.

(4) Operating lifetime. Equipment transient suppression must be capable of safely dissipating the number and amplitude of surges specified in Table 1-17 or 1-18 as applicable. Clamp voltage shall not change more than 10 percent over the operating lifetime.

(5) In-line devices. Only inductors designed to have low dc resistance shall be used as in-line devices for suppression of conducted powerline transients. In-line inductors shall safely pass equipment operation voltages and line current with 130 percent overvoltage conditions for a period of 50 milliseconds.

e. Housing. Suppression components should be housed in a separate, shielded, compartmentalized enclosure as an integral part of equipment design. Bulkhead-mounted, feedthrough capacitors should be used as necessary to prevent high-frequency transient energy from coupling to equipment circuits. Suppression components should be directly bonded to equipment case ground when at all feasible. Suppressor connections to ground must be short, straight, and direct.

1.3.3.7.7 Power Supply Transient Suppression. Power supplies (5 to 48 V dc) that operate from commercial ac power inputs and furnish operating voltage to solid-state equipment must have a transient suppressor installed between the rectifier output and case ground. This protection (in addition to the service disconnect arrester and powerline suppression at equipment entrances) is required because of the adverse electromagnetic environmental operating conditions for much military equipment. A silicon avalanche diode suppressor will provide the best protection for this particular application. The silicon avalanche diode suppressor is recommended because of the very fast response time of the device, since the primary purpose is to clamp very fast risetime and very short duration transients. In addition, the silicon avalanche diode suppressor provides the lowest clamping voltage available. Thus, when this device is used, the clamped output of the transient suppression at the ac input-equipment interface will be clamped to a lower level by the avalanche diode at the rectifier. This, in turn, provides optimum protection for solid-state voltage regulators and other solid-state components receiving operating voltage from the power supply. Operating characteristics for the suppressor installed at the rectifier output must be as follows if the suppressor is to provide the desired function:

a. Operating (reverse standoff) voltage. Reverse standoff voltage must be 5 percent above maximum rectifier output voltage.

b. Leakage current. Leakage current to ground should not exceed 100 microamperes at standoff voltage.

c. Turn-on voltage. Turn-on voltage must be as near standoff voltage as possible using state-of-the-art suppressors, and shall not exceed 125 percent of reverse standoff voltage.

d. Discharge (clamp) voltage. Clamp voltage must be the lowest possible value that can be obtained using state-of-the-art suppressors not to exceed 160 percent of turn-on voltage.

e. Overshoot voltage. Overshoot voltage must be sufficiently low to preclude equipment damage or operational upset. Time duration of overshoot voltage shall be limited to the shortest possible time not exceeding 2 nanoseconds.

f. Self-restoring capability. Transient suppressors installed in power supplies must automatically restore to an off state when line transient falls below rated turn-on voltage for the suppressor.

g. Operating lifetime. The transient suppressors must safely dissipate 1000 surges with an amplitude of 200 volts above rectifier output voltage and a waveform of 8-by-40 microseconds. Eight microseconds defines the time from the start of the transient to peak voltage, and 40 microseconds is the time from the start of the transient until the transient exponentially decays to 50 percent of peak value.

1.3.3.7.8 Landline Transient Suppression. When the equipment withstand level is below the transient energy level projected to occur at direct la&line-equipment interfaces, transient suppression must be provided by equipment design. Generally, all direct landline-equipment interfaces will require transient suppression. However, when the landlines are totally enclosed end-to-end in ferrous metal conduit, a much lesser degree of suppression is required than when the landlines are direct earth-buried or overhead cable runs. At the time of new equipment design, when provisions for transient protection must be included, the manufacturer may not know whether externally exposed landlines will be totally enclosed in ferrous metal conduit. When the

manufacturer is not conclusively certain that external landlines will be enclosed in metal conduit, designed transient protection must ensure that the equipment will be adequately protected against the transient levels of Table 1-19. Subsequent paragraphs provide design guidelines for transient suppression for all types of landlines. Coaxial and twinaxial lines are treated separately. Also, externally-exposed landlines that carry signals of 3 MHz to 400 MHz are treated separately.

a. Control, status, intrafacility power, and audio landlines. Control, status, intrafacility power, and audio lines, other than coaxial or twinaxial lines, are most effectively protected by transient suppression designed as an integral part of the equipment, and specified transient suppression installed at building penetration or exterior equipment termination. Effective design is shown in Figure 1-43.

(1) Suppression design and component selection. Transient suppression will effectively protect equipment only when proper components are selected so that the components operate in conjunction to provide the desired function. This is necessary so that the clamped output of the suppression components/circuits can provide optimum equipment protection. Actual suppression components are shown in Figure 1-43 as GT1, RV1, RV2, and TS1. The suppression component at the equipment entrance should be chosen so that it has a lower turn-on and clamping voltage than the suppression component at the facility entrance. Therefore, resistor R1 must provide a voltage to turn on the suppression component at the facility entrance and limit current flow through the suppressor at equipment entrance. Otherwise, the suppression component at the facility entrance may not turn on when a transient occurs. The component will not normally turn on when a transient of less than 400 volts peak amplitude occurs and the component is a gas-filled spark gap (GT1). However, when a transient of greater amplitude occurs, the suppression component at the facility entrance must turn on. Otherwise, the suppression component at the equipment entrance will attempt to dissipate the entire transient to ground. As a result, the suppression component at the equipment entrance will attain a higher clamp voltage as it dissipates additional transient current. The higher clamp voltage is reflected across protected equipment. In addition, the suppression component is likely to fail.

(a) Gas-filled spark gap GT1. A gas-filled spark gap is suitable for use as a transient suppressor at the building/facility entrance in some cases. The device has a relatively high sparkover (turn-on) voltage and a relatively slow turn-on time when compared with a metal oxide varistor (MOV) or silicon avalanche diode suppressor (SAS). For typical lightning-induced transients on landlines, turn-on voltage is a nominal 500 volts with an associated turn-on time of 5 microseconds. These characteristics are satisfactory as long as the value of resistor R1 is 10 ohms or more, and the peak pulse current rating for the suppression component at the equipment entrance is not exceeded. When R1 is 10 ohms, a peak current of 50 amperes is required to provide a voltage of 500 volts across R1 which is the nominal turn-on voltage for GT1. Since GT1 turns on after a nominal 5 microseconds, the peak pulse current rating for most MOV and SAS devices will not be exceeded. After the spark gap turns on, arc voltage across the device is a nominal 20 volts. This may be sufficiently below the normal line voltage to create operational upset of the protected equipment, which in some cases cannot be tolerated. If normal line voltage is greater than 20 volts, difficulty may be encountered in turning off the device, depending on available current. The arc mode of operation may be sustained by current greater than 1 ampere for some devices. When the value of R1 is less than 10 ohms, an MOV or other equivalent suppressor must be used at the facility entrance because a spark gap will not turn on before the suppressor at the equipment entrance is damaged by overcurrent, particularly when the suppressor at equipment entrance is an SAS.

(b) Metal oxide varistor (MOV) RV1, RV2. As shown in Figure 1-43, MOVs can be used in various configurations to provide effective transient suppression. Turn-on time for the MOV is less than 50 nanoseconds, and turn-on voltage ranges from 22 to 1800 volts. Clamp voltage is not as low as for SAS devices and turn-on time is not as fast. The turn-on time for SAS devices is typically less than 10 nanoseconds, and less than 1 nanosecond in some configurations. The configuration shown in Figure 1-43c is especially effective for protecting highly susceptible equipment. The configurations shown by Figures 1-43a and 1-43b provide adequate protection when the protected equipment can safely withstand the rated clamping voltage for the MOV at the equipment entrance. An MOV with a 20 mm element diameter will normally provide required protection at the facility entrance, and a 10 mm element diameter MOV will normally provide required protection at the equipment entrance. To enable desirable functioning, the turn-on voltage of the MOV suppressor at the facility entrance should exceed that of the MOV at the equipment entrance by approximately 10%. This is desirable to permit the MOV at the equipment entrance to turn on and dissipate low-amplitude transients while reflecting a low clamp voltage to protected equipment. When a high-amplitude transient occurs, the voltage increase across R1 will cause the MOV at the facility entrance to turn on. When the MOV at the facility entrance turns on, it dissipates most of the remaining transient energy, thereby eliminating or greatly reducing the energy to the MOV at the equipment entrance. Thus, the MOV at the equipment entrance will conduct only a small amount of current and maintain a low clamp voltage that will appear across the protected equipment. The MOV operating characteristics are similar to those for a pair of back-to-back zener diodes. Therefore, the device responds the same to a negative or positive transient voltage.

(c) Silicon avalanche diode suppressor (SAS) TS1. The SAS device has the fastest turn-on time of any of the three suppressor devices shown in Figure 1-43. Turn-on time is typically less than 10 nanoseconds and can be less than 1 nanosecond in some configurations depending on lead length and the path to ground for the device. Turn-on voltage ranges from 6.8 volts to 200 volts. Devices may be connected in series to obtain higher turn-on voltages and to improve power handling capability. For example, two devices connected in series can dissipate approximately 1.8 times the power dissipated by a single device. The clamping voltage for the device is also lower than for MOV devices. The maximum clamping voltage for the SAS devices is approximately 1.6 times the turn-on voltage at peak pulse current. Peak pulse current ranges from 139 amperes for a 6.8-volt device to 5.5 amperes for a 200-volt device over a period of 1 millisecond. Devices recommended for use at the equipment entrance have a peak pulse power dissipation rating of 1500 watts over a period of 1 millisecond. Devices are available in both unipolar and bipolar configurations. Operation of a unipolar device is very similar to that of a zener diode, and operation of a bipolar device is very similar to that of a pair of back-to-back zener diodes. For the most effective protection, unipolar devices should be used on lines that carry unipolar voltage provided the ac noise level on the applicable line is less than 0.5 volt. Use bipolar devices on lines that carry bipolar (ac) voltage and on lines with an ac noise level greater than 0.5 volt. Select SAS devices based on the reverse standoff voltage rating. The reverse standoff voltage must be greater than maximum line operating voltage, and should exceed normal line voltage by 20% when possible.

(d) Resistor R1. The function of resistor R1 is to provide current limiting for the suppression device at the equipment entrance and to provide a turn-on voltage for the suppressor at the facility entrance. Empirical evidence has shown that the power rating for the resistor should be 5 watts. The resistance value should be as high as equipment operation will permit. Typical values are 10 to 50 ohms. Values as low as 2 ohms have been successfully used. However, when the value is less than 10 ohms, the suppressor at the facility entrance must be an MOV or equivalent type suppressor.

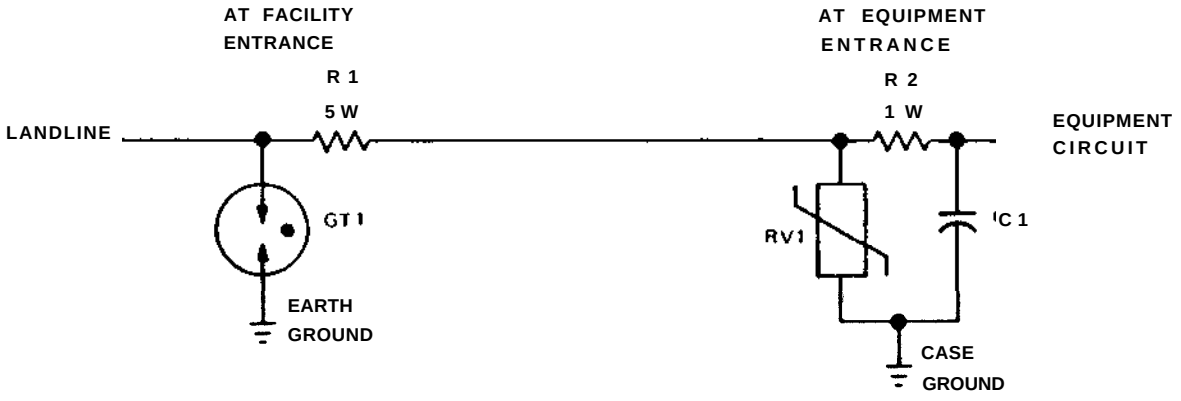

a. CONFIGURATION NO. 1

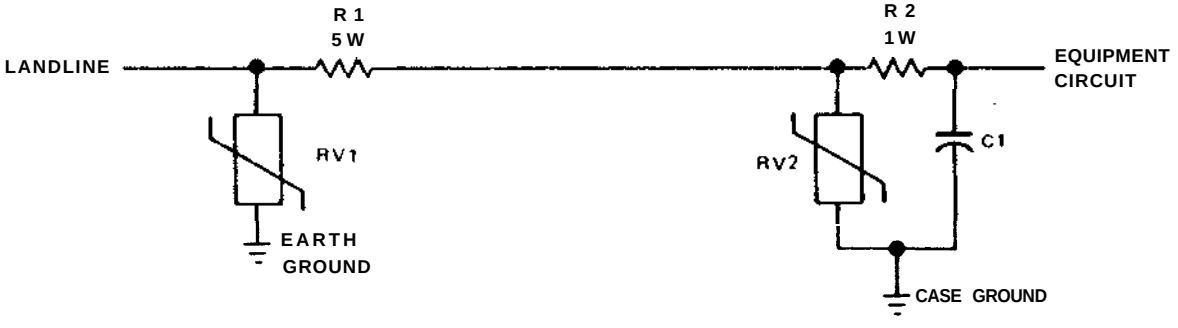

b. CONFIGURATION NO. 2

c. CONFIGURATION NO. 3

Figure 1-43. Typical Configuration for Protection of Equipment from Conducted Landline Transients

(e) Resistor R2 and capacitor C1. Resistor R2 attenuates current flow to protected equipment resulting from clamp voltage of the transient suppressor at the equipment entrance. The resistor also speeds up, and in some cases, generates turn-on of the transient suppressor at the equipment entrance. In addition, the resistor limits current drain from protected equipment when a transient with polarity opposite that of the equipment power supply occurs. A power rating of 1 watt is sufficient for the resistor. The resistance value should be as high as can be tolerated by applicable equipment, taking into consideration the value of resistor Rl and the impedance of the associated landline. The purpose of capacitor C1 is to filter out some high-frequency transient components, and the value of C1 should be selected accordingly. In some cases, equipment operating characteristics and line length may preclude the use of resistor R2 and capacitor C1.

(2) Grounding for suppression components/circuits. The high-energy transient suppressors, shown at the facility entrance in Figure 1-43 must be grounded to earth ground by means of the shortest path. This will minimize the large voltage spikes, caused by L di/dt effects when high-amplitude transient currents flow through the high-energy transient suppressor onto the ground, which in turn may damage protected equipment or the low-energy transient suppressors at the equipment entrance.

(a) Grounding of transient suppressor at facility entrance. The high-energy transient suppressors installed at the facility entrance should be located in a junction box or the main (first) service disconnect where incoming lines are first terminated. The most effective ground for the suppressors can be provided by a ground bus bar located in the first service disconnect or the junction box. The transient protection devices (TPD's) must be bonded to the TPD box and grounded by the shortest means. It is important that the ground wire has no sharp turns or bends, and is as short as feasible. The ground bus bar should be located to permit short, direct connection of suppressors between landline terminations and earth ground.

(b) Grounding of transient suppressor at equipment entrance. The low-energy transient suppressor at the equipment entrance should be directly bonded to the equipment case when possible. The ground side of the suppressor at the equipment entrance must be connected with a short, straight, direct connection to equipment case to be effective. Connection of the suppressor to equipment case references both the suppressor and equipment circuits to the same ground potential, thus providing optimum equipment protection.

(3) Packaging design. Transient suppression components/circuits included as an integral part of equipment design should be enclosed in a shielded, compartmentalized section of the equipment. This is necessary to preclude cross-coupling of transient energy to other equipment circuits. The suppression components must be located so that transients are attenuated prior to entering any equipment component susceptible to damage, including EMI filters. Packaging design for transient suppression specified for installation at facility entrance is not critical. However, the design should provide for short, direct connection of transient suppressors between the line termination and ground.

b. Coaxial and twinaxial lines (dc to 3 MHz). The same transients are projected to occur on externally exposed coaxial and twinaxial lines as on the control and status lines discussed in paragraph 1.3.3.7.8a. In general, the same transient protection described in paragraph 1.3.3.7.8a will provide effective transient protection for equipment that directly interfaces the coaxial and twinaxial lines. That is, the most effective transient protection is provided by installing a high-energy transient suppressor and resistor at the facility

entrance or exterior equipment termination, with low-energy transient suppression included as an integral part of the equipment as shown in Figure 1-43. However, in many cases, end equipment connected to coaxial lines cannot tolerate added capacitance imposed by capacitor C_1. Also, in most cases, the added resistance of resistor R2 cannot be tolerated. Because most end equipment connected to coaxial and twinaxial lines has a relatively low withstand level, the configuration shown in Figure 1-43c, without resistor R_2 and capacitor C_1, should be used for transient suppression. The silicon avalanche diode suppressor TS_1 should always be bipolar. The configuration shown by Figure 1-43c should be used for protection of equipment that directly interfaces externally exposed twinaxial lines. In most cases, it is necessary to use a bipolar SAS since the twinaxial lines normally conduct both dc and low-level audio signals. Specific design criteria is provided in paragraphs (1) and (2) below.

(1) Facility entrance suppression. The high-energy transient suppression specified for location at facility entrance or exterior equipment termination should be designed for in-line installation on applicable lines. The lines should be terminated at a metal connector plate located in a junction box at the facility entrance or exterior equipment termination. Transient suppression components should be enclosed in a sealed, metal enclosure with appropriate connectors to facilitate in-line installation. The ground side of suppressor(s) in the sealed package must be connected as directly as possible with No. 12 AWG copper wire (minimum) to a ground point located on the exterior of the sealed package to facilitate connection to a ground bus or tie point in the junction box. The package for a twinaxial line must include two suppression circuits, one for each of the two center conductors. Also, when a coaxial cable shield is not directly grounded at interfaced equipment, the enclosure for in-line installation must also contain two transient suppression circuits, one for the cable center conductor and one for the cable shield. Circuit configurations for each type of line are depicted in Figures 1-44 and 1-45. Primarily because of the grounding configuration, MOV or equivalent devices should be used at facility entrance.

(2) Equipment entrance suppression. Equipment entrance suppression is shown in Figure 1-44 for coaxial line-equipment interfaces. The transient suppression should be enclosed in shielded, compartmentalized areas to prevent cross-coupling of transient energy to other equipment circuitry. The transient suppression must be located so that transients are attenuated prior to entering any susceptible equipment components, including EMI filters. Because of the normally low withstand levels for end equipment, only bipolar avalanche diode suppressors should be used at equipment entrance. However, MOV suppressors may be used when the protected equipment can safely withstand the clamp voltages that will appear across protected equipment. For the most effective protection, the ground side of transient suppressors should be bonded directly to equipment case. When direct bonding is not possible, short, direct connections to equipment case must be used.

c. Transient suppression for lines in metal conduit. When externally exposed lines are enclosed end-to-end in ferrous metal conduit, the amplitude of transients projected to be conducted to equipment will be attenuated a minimum of 90%. The number of transients that occur will not change. Therefore, the number of transients listed in Table 1-19 will still occur, but amplitudes will be only 10% of the amplitudes listed in Table 1-19. When the equipment manufacturer is absolutely certain that all externally exposed equipment lines will be enclosed in ferrous metal conduit, total transient suppression should be designed as an integral part of the equipment. The total transient suppression should consist of a 5-watt resistor in series with the landline input, and an MOV or SAS connected line-to-ground on the equipment side of the 5-watt resistor.

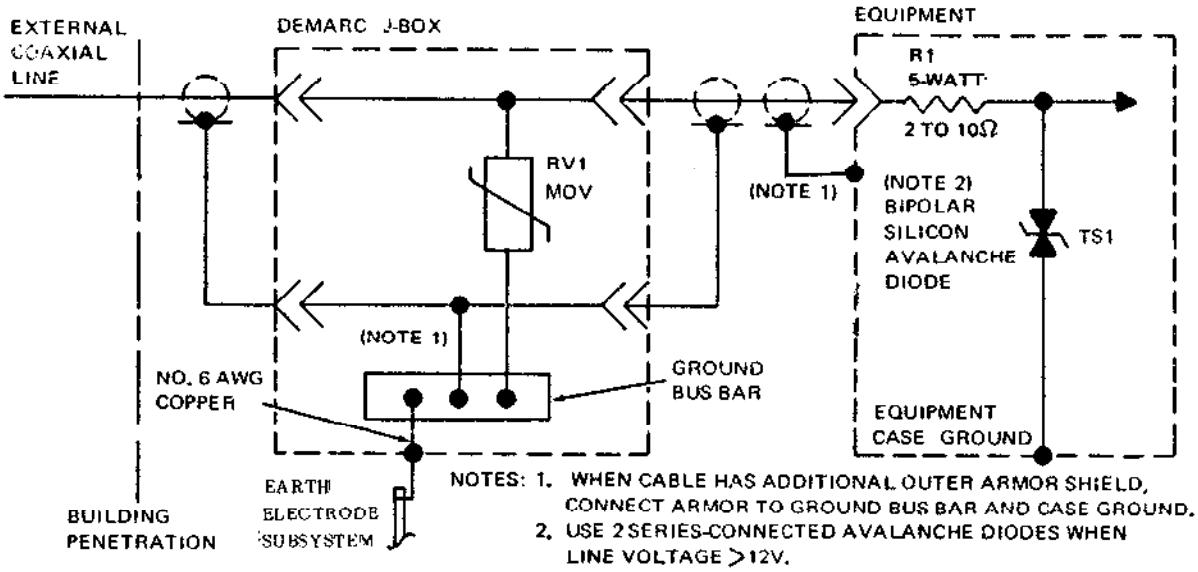

A. TYPICAL TRANSIENT SUPPRESSION FOR COAXIAL LINE (SHIELD NOT ISOLATED FROM GROUND)

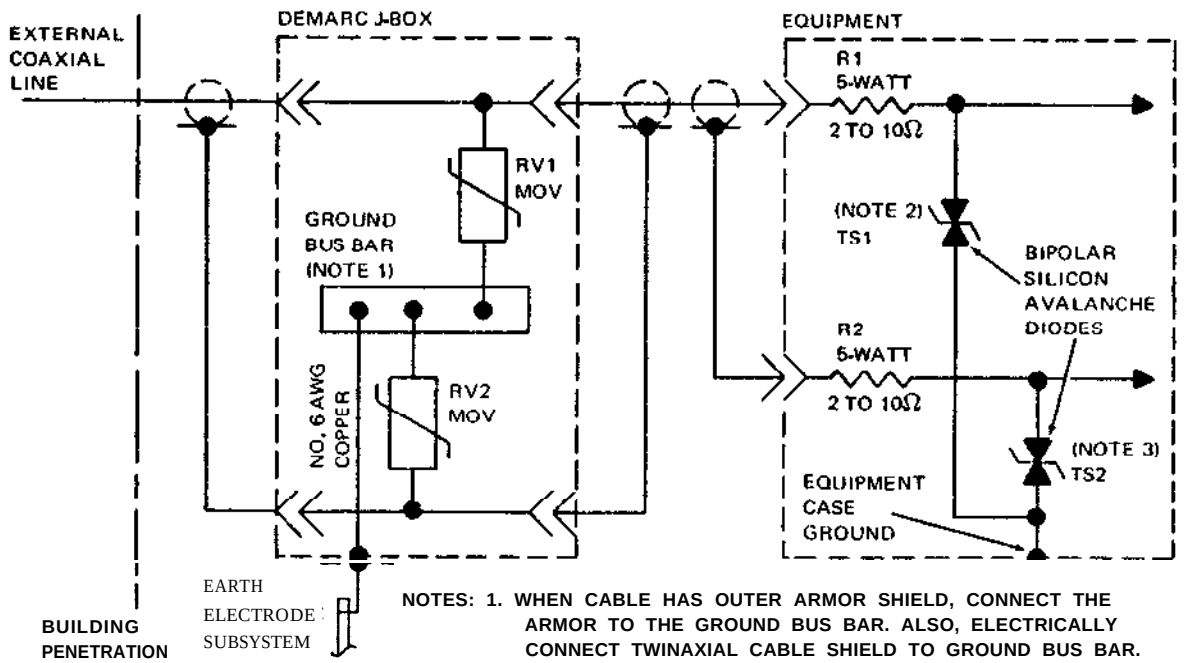

NOTES: 1. WHEN CABLE HAS OUTER ARMOR SHIELD, CONNECT THE ARMOR TO THE GROUND BUS BAR. ALSO, ELECTRICALLY CONNECT TWINAXIAL CABLE SHIELD TO GROUND BUS BAR.
2. USE 2 SERIES-CONNECTED AVALANCHE DIODES WHEN LINE VOLTAGE > 12V.
3. STANDOFF VOLTAGE FOR TS2 SHOULD BE AS LOW AS POSSIBLE, BUT SHALL NOT TURN ON IN RESPONSE TO HUM VOLTAGE ON SHIELD.
4. J-BOX SHALL BE GROUNDED USING SHORTEST MEANS.

B. TYPICAL TRANSIENT SUPPRESSION FOR COAXIAL CABLES (COAXIAL SHIELD ISOLATED FROM GROUND)

Figure 1-44. Transient Suppression for Coaxial Lines (DC To 3 MHz)

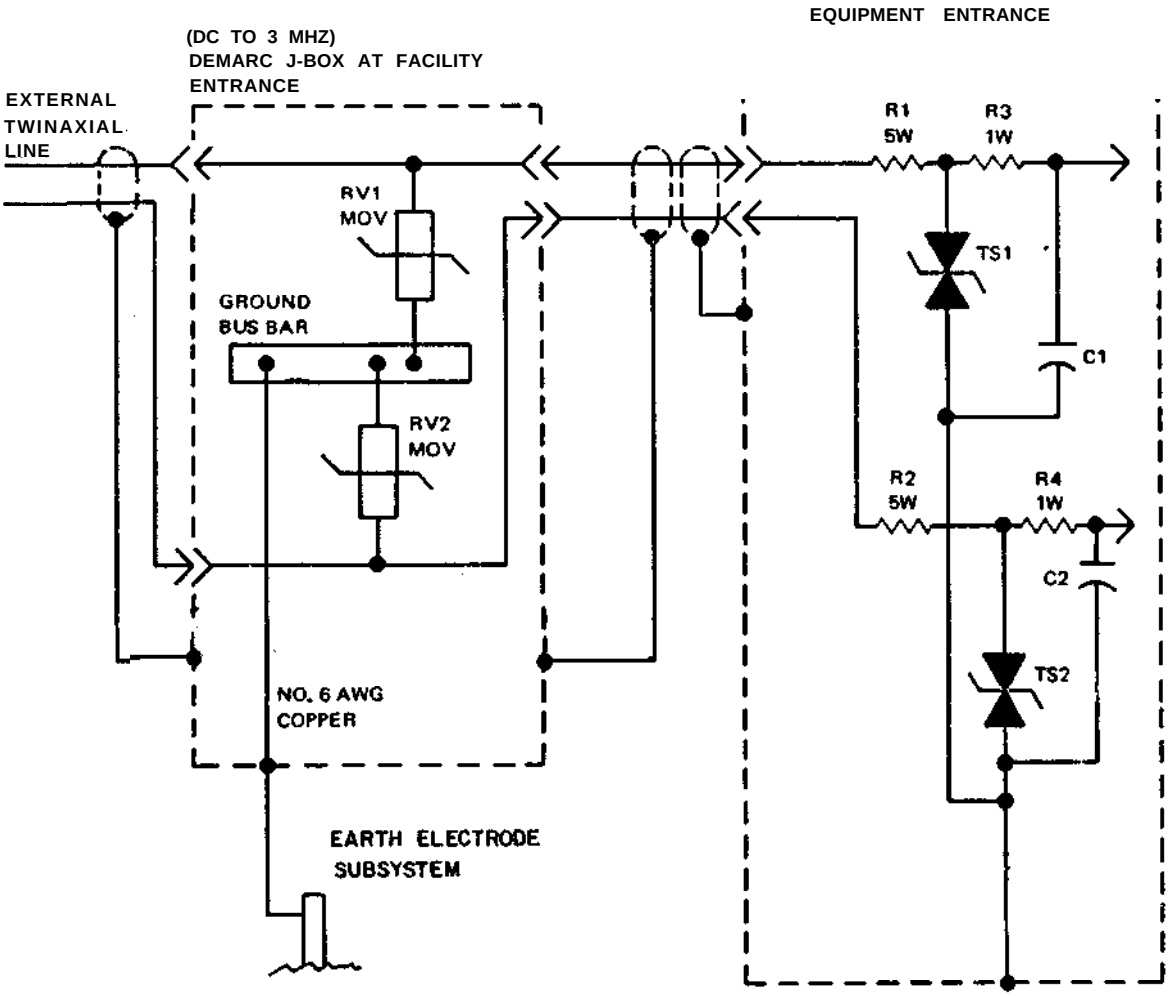

Figure 1-45. Transient Suppression for Twinaxial Lines (DC To 3 MHz)

d. Functional characteristics. For effective transient suppression, the suppression components must have certain minimum operating or functional characteristics. These characteristics are defined in paragraphs 1.3.3.7.8d(l) and (2) for high-and low-energy transient suppressors, respectively.

(1) High-energy transient suppression characteristics.

(a) Reverse standoff voltage. Reverse standoff voltage for spark gap type suppressors should be between 200 and 300 percent of the nominal operating line voltage. For MOV, ZNR, and SAS type suppressors, the reverse standoff voltage should be 175 ± 25 percent of the nominal line voltage.

(b) Leakage current. Leakage current to ground should not exceed 100 microamperes at reverse standoff voltage.

(c) Turn-on voltage. Turn-on voltage should not exceed 125 percent of reverse standoff voltage.

(d) Overshoot voltage. Overshoot voltage should be the lowest voltage that can be obtained, for the shortest time possible, using the best state-of-the-art suppressors available.

(e) Clamp (discharge) voltage. Clamp voltage of the transient suppressors should be as low as possible and not more than 225 percent of turn-on voltage when discharging a transient with 1000 amperes peak amplitude.

(f) Operating life. The transient suppressor must be capable of discharging the number of transients listed in Table 1-19 with peak amplitudes that are 90% of those listed in Table 1-19. Clamp voltage must not change more than 10 percent over the operating lifetime.

(g) Self-restoring capability. The transient suppressor must automatically restore to the off state when the transient voltage level falls below turn-on voltage.

(2) Low-energy transient suppressor characteristics.

(a) Reverse standoff voltage. The reverse standoff voltage rating of the transient suppressor should be between 200 to 300 percent above the nominal line voltage for spark gap type suppressors. For MOV, ZNR, and SAS type suppressors, the reverse standoff voltage should be 175 ± 25 percent of the nominal line voltage.

(b) Turn-on voltage. Turn-on voltage of the suppression component at the equipment must be as close to reverse standoff voltage as possible using state-of-the-art devices, and shall not exceed 125 percent of reverse standoff voltage.

(c) Overshoot voltage. Overshoot voltage must be the lowest value that can be obtained, for the shortest time possible, using state-of-the-art suppressors. Overshoot voltage shall be low enough to preclude equipment damage or operational upset. The requirement will apply for transients with rise times as fast as 5,000/µs.

(d) Leakage current. Leakage current to ground should not exceed 100 microamperes at reverse standoff voltage.

(e) Clamp voltage. Clamp voltage must remain below the equipment withstand level while dissipating transient currents with peak amplitude that are 10 percent of those listed in Table 1-19. The clamp voltage must not change more than 10 percent over the operating lifetime.

(f) Operating life. The transient suppressor must be capable of safely dissipating the number of transients listed in Table 1-19, with current amplitudes that are 10 percent of those listed in Table 1-19.

e. RF coaxial lines (above 3 MHz). At the present time, there is some difficulty encountered in providing effective transient suppression for lines that conduct signals above 3 MHz in frequency, and especially above 10 MHz. Most suppression devices that provide low-level clamping of transients have enough capacitance to create high insertion losses when installed line to ground on the conductor. Packaging of the devices for in-line installation without causing high insertion losses is also difficult and expensive. Gas-filled spark gaps have

been successfully packaged for in-line installation on critical rf lines, but unit cost is excessive. Also, gas-filled spark gaps do not always provide satisfactory protection because of high sparkover (turn-on) voltage, slow turn-on time, and low arcing voltage. Therefore, the best alternative at present is to include transient suppression design as an integral part of new equipment.

(1) Transient suppression design. Potential sources of effective transient suppression are gas-filled spark gaps, MOV in series with rf chokes, and surge-rated, low capacitance silicon avalanche diodes paralleled with selected rf chokes. All of the suppression devices and components are for line-to-ground connection at the line-equipment interface.

(2) Transient suppression grounding. The total transient suppression is included as an integral part of the equipments, and may have to dissipate the transient currents listed in Table 1-19. However, in most cases, these lines will be enclosed in ferrous metal conduit, and the amplitude of occurring transients will therefore be only 10% of the values listed in Table 1-19. In either case, the transient suppression should be grounded directly to equipment case ground using the shortest and most direct method possible. The equipment case must, in turn, be effectively connected to the earth grounding system via the equipment rack and the equipment grounding conductor, when applicable.

(3) Packaging design. The transient suppression should be located in a shielded, compartmentalized section of the equipment and located so that conducted transients are attenuated prior to entering any susceptible circuit component.

1.3.3.8 Corrosion Control.

a. The materials of which lightning protection subsystems are made must be highly corrosion resistant. Junctions or contact between dissimilar metals must be avoided; where such unions are unavoidable, moisture must be permanently excluded from the contacting surfaces.

b. Where any part of a copper protective system is exposed to the direct action of chimney or other corrosive gases, the exposed copper elements are to be protected by a continuous hot dip coating of lead. The coating should extend at least 0.6 meters (2 feet) below the top of the chimney or past the vent or flue opening.

c. Where aluminum down conductors are used, do not permit them to come in contact with the soil.

(1) Connections between aluminum down conductors and copper ground electrode risers are not to be made lower than one foot above grade level; use UL-approved bimetallic connectors for these connections.

(2) Aluminum parts, including fasteners and anchors, should be protected from direct contact with concrete or mortar wherever such concrete or mortar is wet or damp or may become intermittently wet or damp.

(3) Aluminum parts also must be protected from contact with alkaline-based paints.

d. Aluminum parts are not to be used on copper roofing materials and must not contact other copper surfaces such as gutters, flashings, and trim. Similarly, do not use copper lightning protection materials on aluminum structures or on structures using aluminum roofing materials or aluminum siding. Avoid contact between copper conductors, terminals, and fasteners and aluminum gutters, windows, and trim.

e. In aluminum lightning-protection systems, copper, copper-covered, or copper-alloy fixtures and fittings must not be used for connectors. Where aluminum must connect to copper, only UL-approved bimetallic connectors are to be used.

1.3.3.9 Joints.

a. Welded or brazed bonds are preferred over all other types; in particular, junctions in inaccessible locations should be welded or brazed whenever practical.

b. Never use soldered connections for bonding any part of the lightning protection system.

c. Bolted or clamp-type connections should employ only UL-approved connectors.

d. Where bolted connections to flat surfaces are necessary, the surface contact area should be 3 square inches (19.5 square cm) or greater.

1.3.3.10 Physical Protection.

a. Protect all elements of the lightning protection system from damage and physical abuse by routing conductors to take advantage of any protection offered by structural features. Install appropriate guards or covers preferably made of wood or noncombustible synthetic material.

b. Where conductive conduit is used, bond the conduit to the enclosed lightning conductor at each end of each isolated section of the conduit. (Standard conduit grounding lugs are acceptable.)

c. The use of ferrous conduit to enclose lightning conductors should be avoided because it increases the impedance of the lightning conductor.

1.4 FAULT PROTECTION SUBSYSTEM.

1.4.1 Purpose. In Volume I, the equipment fault protection subsystem was described as a network which ensures that personnel are protected from shock hazard and equipment is protected from damage or destruction resulting from faults that may develop in the electrical system. To accomplish this, ground connections must be adequate for both normal and fault currents. The fault protection subsystem includes the green wire and all exposed noncurrent-carrying metal parts of fixed equipment such as raceways and other enclosures which are likely to be energized under power fault conditions. Any conductor used for grounding purposes shall not Penetrate any designated rf barrier, screen room, shielded enclosure etc., but shall rather be bonded to a welded stud on the barrier. In general, the equipment fault protection subsystem will conform to the requirements established in MIL-STD-188-124A.

1.4.2 Equipment Fault Protection Subsystem Composition. One of the major shortcomings in grounding systems is the interconnection and reversal of ac neutral and protective wires of the ac power distribution at various power distribution panels and at equipment throughout a facility. These installation errors result in additional electrical noise and ac currents in the ground system. The equipment fault protection subsystem should generally follow a configuration from a central or main ground point which, ideally, should be at the primary power station transformer ground point; or, it should be bonded directly to the earth electrode subsystem at the communications building, if a protective wire is not available to the main ground point. The configuration consists of a central main or trunk lead from the power source with protective conductors to the various intermediate power panels and equipment. The protective wire is carried along with the phase and neutral wires from the main ground point to the main circuit breaker panel, from there to intermediate circuit breaker panels to the equipment panels, and finally to the equipment.

1.4.3 Configuration of the Equipment Fault Protection Subsystem.

a. The equipment fault protection subsystem consists primarily of the grounding conductors of the interior ac power distribution system. The grounding conductors are green insulated or bare wires running in the same conduit or duct with the neutral and phase conductors. Covered grounding conductors are preferred to reduce EMI. Figure l-46 illustrates a typical equipment fault protection subsystem. Key points to be noted are:

(1) The conduit is grounded to the power panel at each end, but it is not used in lieu of a grounding conductor which continues through the conduit to the protective bus bar.

(2) The ac neutral lead can be grounded at the first service disconnect means. In this case, the ac neutral also serves as a protective conductor back to the source. For best results, the ac neutral (grounded) and green (grounding) wire should be grounded at the service transformer and the first service disconnect means through the five-wire distribution system.

b. To protect personnel from exposure to hazardous voltages, all exposed metallic elements of electrical and electronic equipment shall be connected to ground. In the event of inadvertent contact between the “hot” lead and chassis, frame, or cabinet through human error, insulation failure, or component failure, a good, direct, known fault current path will be established to quickly remove the hazard. The neutral lead shall be grounded for fault protection preferably at the distribution transformer and if the transformer is outside the building, at one additional point outside the building. It should never be grounded on the load side of the first service disconnect means.

c. Grounding conductors and ground connections for transformers, switchgears, motors etc., shall comply with the requirements of the NEC Articles 250-92 and 250-95.

d. Metal boxes, fittings, and noncurrent-carrying metal parts of other fixed equipment do not require additional protection if metallically connected to the grounded cable armor or bonded to the grounded members of the building. MIL-STD-188-124A provides that the path to ground for circuits, equipment, and conductor enclosures be permanent and continuous. The path must have (1) the capacity to conduct safely any fault current likely to be imposed upon it, and (2) sufficiently low impedance to limit voltage to ground and to aid the operation of circuit protective devices.

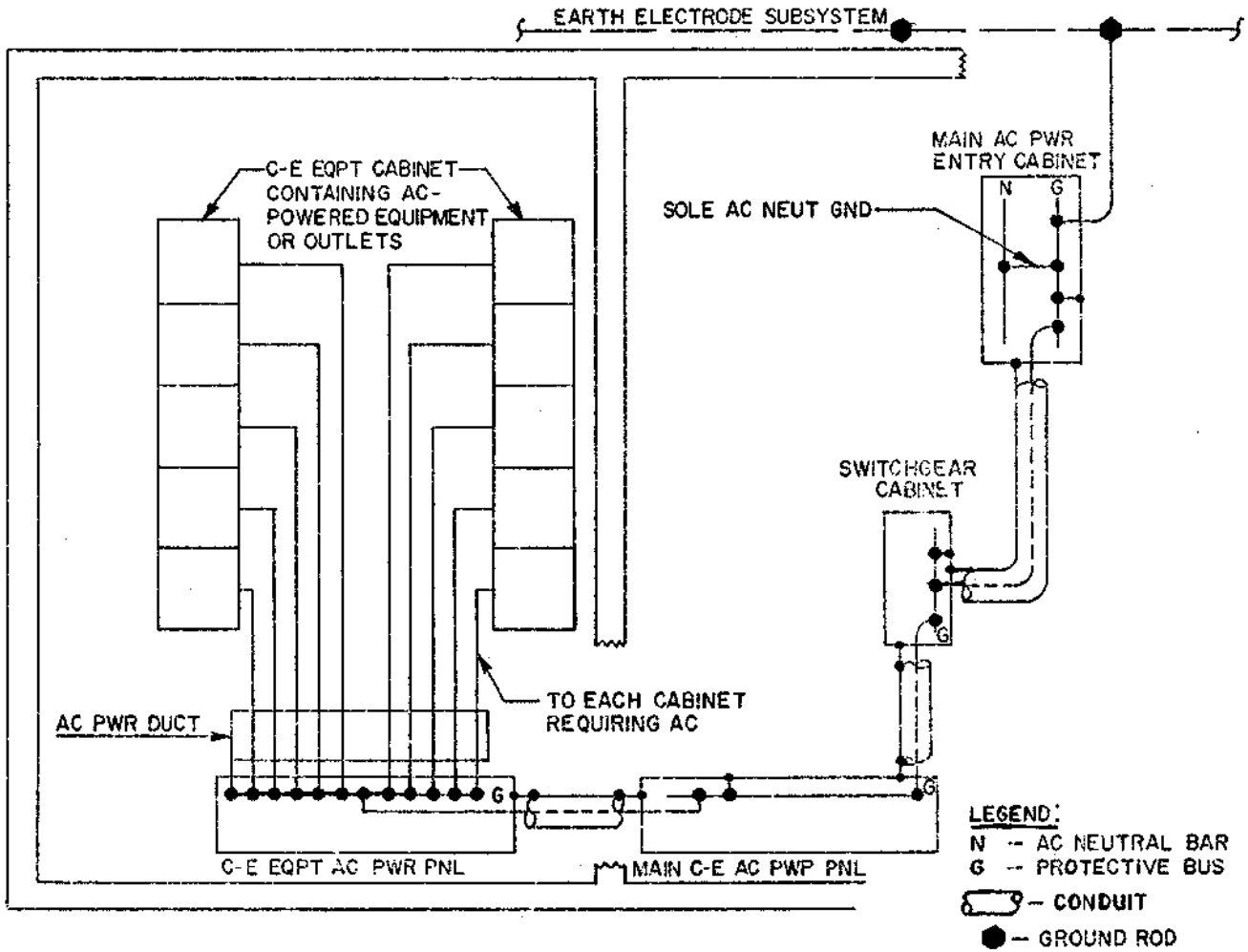

NOTE 1: AC PHASE AND NEUTRAL WIRES AND METAL-TO-METAL CONTACTS ARE OMITTED FOR CLARITY. THE GREEN WIRE IS IN THE SAME ENCLOSURE OR CABLE WITH THE POWER CONDUCTORS.

NOTE 2: ALL GROUNDING CONDUCTORS PENETRATING/CROSSING A DESIGNATED RF BARRIER/SHIELD SHALL BE BONDED TO THE BARRIER OR SHIELD.

Figure 1-46. Typical Equipment Fault Protection Subsystem

e. Article 250-91 of the NEC describes the types and materials used for equipment grounding conductors. Types include solid and stranded (insulated or bare) wire or other shapes, such as metallic tubes, pipes, and conduit. The grounding conductor types permitted by the NEC also include various metal ducts, cable trays, and raceways however these types shall not be used in lieu of the equipment grounding conductors. The NEC also permits/allows certain types of armored cable sheath be used as grounding conductors.

f. Experience with military C-E facilities has proven that a low-noise, low-impedance equipment fault protection subsystem can be maintained over a prolonged period of time if separately designed and installed ground conductors are provided. Therefore, a separate equipment fault protection conductor shall be included with the ac power distribution if not provided in the power cable. A grounding (green) wire should be used and installed in the same conduit as the other ac wires. When ferrous ducts or conduits are used to protect or shield the neutral and phase conductors, the lowest impedance will result when this grounding conductor is installed in the same duct or conduit. The impedance can be further decreased if the grounding conductor is wrapped around the other conductors and bonded to the duct or conduit at both ends. In a correctly installed power distribution system, there should be no power current on the grounding conductor, except during a fault condition. It should be noted that there are two types of faults causing overcurrent devices to operate. The first is an overload condition in equipment. In this case, fault current is on the neutral and phase leads. The second fault is where a phase or hot lead is inadvertently grounded. The fault current in this case is on the base lead and the grounding conductor. In both cases, the overcurrent protective device, usually a circuit breaker, is opened in the phase or hot lead. Due to the fault currents that can flow either on the phase leads, neutral, or grounding conductor, it is recommended that a 2-inch separation be maintained between power runs and signal runs when neither is in conduit.

1.4.4 Pipes and Tubes.

a. All metallic pipes and tubes (including conduit) and their supports should be electrically continuous and are to be bonded to the facility ground system at least at one point. If any run of metal pipes or tubes exceeds 3 meters (10 feet) in length, it should be bonded to the facility ground system at each end. Also, longer runs should be bonded to the facility ground system at intervals of approximately 45 meters (150 feet).

b. At indoor locations, these bonds may be made with clamps which provide continuous pressure. Pipes installed out of doors should be bonded to the facility ground system at entry point or wherever feasible by welding or brazing. Compatible stainless steel straps may be used with stainless steel pipe. In the event that a direct bond cannot be made, zinc-plated hose clamps or stranded, bare copper, untinned bond straps may be used. All bonds should be adequately protected against corrosion in humid or corrosive environments.

c. Joints in metal pipes and tubes should have a dc resistance no greater than 5 milliohms. In the case of threaded joints, the threads should be cleaned and firmly tightened (200 ft-lbs for hard wall conduit) and protected against corrosion. Leaded or caulked joints, flared and other compression fittings, and O-ring fittings should all be measured to verify that the joints have a dc resistance no greater than 5 milliohms.

1.4.5 Electrical Supporting Structures. Electrical supporting structures such as conduit, cable trays or raceways, wiring system enclosures, and metallic power cable sheaths should be electrically continuous and are to be bonded to the facility ground system at multiple points. In the event of a fault, this continuity will prevent these structures from rising to a hazardous potential.

1.4.5.1 Metal Conduit.

a. All metal conduit is to be grounded, regardless of whether it is used for enclosing power cables or for signal and control cables.

b. All joints between sections of conduit and between conduit, fittings and boxes should be made electrically continuous when they are installed.

c. All pipe and locknut threads should be thoroughly cleaned before they are engaged and then tightened firmly. For additional information see Sections 7.6 and 7.7 of Volume I.

d. Gouging locknuts must positively penetrate all paint or other nonconductive finishes.

e. Any joints not inherently continuous should be bonded with jumpers of No. 12 AWG or larger copper wire. These jumpers should be welded or brazed in place or attached with clamps, split bolts, grounding bushings, or screws and lockwashers.

f. Protect the bonds against weather, corrosion, and mechanical damage.

g. Firmly tighten the screws on the cover plates of pull boxes, junction boxes, and outlet boxes.

h. All conduit brackets and hangers should be securely bonded to both the conduit and to the structural member to which they are attached. Bond conduit runs, to include the individual sections, couplings, line fittings, pull boxes, junction boxes, outlet boxes, etc., to the facility ground system at intervals not exceeding 15 meters (50 feet). The resistance to each connection should not exceed 5 milliohms.

1.4.5.2 Cable Trays. Make all cable tray systems electrically continuous by bonding together each individual section as described in Section 1.7.4.1. Bond each support bracket or hanger to the cable trays which they support. Connect the cable tray assemblies to the facility ground system with copper cables or equivalent conforming to the 2000 cmil per foot criterion. Make the connections within two feet of each end and at intervals not exceeding 15 meters (50 feet) along the run. Where metal covers are used, they should be securely bolted in place.

1.4.5.3 Enclosures. Ground all enclosures of electrical and electronic wiring and distribution equipment in accordance with MIL-STD-188-124A.

1.4.5.4 Cable Armor. The armor on electrical power cables should be bonded to the facility ground system at each end if the cables are 3 meters (10 feet) or longer. Provide supplemental connections at intervals not exceeding 15 meters (50 feet). The resistance of each connection should not exceed 5 milliohms.

1.4.5.5 Rotating Machinery. The frames of motors, generators, and other types of electrical rotating machinery are to be connected to the facility ground system in accordance with the NEC requirements (l-6).

1.4.6 Power Distribution Systems.

a. The neutral of an ac power distribution system is to be grounded to the earth electrode subsystem at the first service disconnect as well as to the ground terminal at the secondary distribution transformer. For separate facilities served by a common distribution system, each disconnecting means should be grounded to the earth electrode subsystem common to the facility. This connection may be lifted if noise or hum problems are encountered. At separate facilities having a common earth electrode subsystem, each service disconnecting means should be grounded to the closest point on the earth electrode subsystem.

b. All distribution neutrals are to be isolated from equipment and structural elements except for the connection at the first service disconnect,

c. Connect the ground terminals of convenience outlets to the facility ground system with the green wire specified by the NEC. Do not use wire mold or plug mold distribution strips which depend upon serrated or toothed fingers for grounding. Effectively ground the ground terminals on such strips with auxiliary grounding conductors equivalent to the green wire requirements of Table 250-95 of the NEC.

d. For a dc power system, ground one leg with a single connection to the earth electrode subsystem. The size of the grounding conductor should conform to the requirements of the NEC. Whether grounded at the source or at the load, provide a dedicated current return conductor from the load to the source to assure that the dc load current in the facility ground system or the lower frequency signal ground network is minimized.

1.4.7 Standby AC Generators. The frames and housing of ac generators should be grounded as prescribed by the NEC. Ground the neutral to the facility main ground plate or to the earth electrode subsystem, whichever is closest. When generators are connected in parallel, interconnect the neutrals and ground them to the facility's earth electrode subsystem with a common grounding conductor.

1.4.8 Equipment Fault Protection Subsystems for Transportable Equipment.

a. To protect personnel from exposure to hazardous voltages, all exposed metal elements of equipment and supporting structures shall be interconnected by a green wire from the ac power distribution system and referenced back to the power source. The grounding requirements of a transportable facility installed in the field and operating from transportable engine generators is relatively simple. The primary requirement is to ensure that (1) all vans, vehicles, trailers, and engine generator units are interconnected through a protective (green wire) network, and (2) the power neutral is grounded from a common bus that is connected to an earth electrode at the generator. Where parts are movable or subject to vibration, metal straps may be used in lieu of the green wire.

b. When transportable facilities are powered from a commercial base ac source or are integrated into a permanent installation with nontransportable facilities, personnel protection requirements become more complex. When part of a fixed installation, the transportable system shall be integrated into the facility ground system by extending the earth electrode subsystem to provide connections for the transportable facility. All metallic components of the facility shall be interconnected through the equipment fault protection subsystem and bonded to the earth electrode subsystem at the main power panel, or back to the primary power source through the ground conductor of the power distribution cable.

1.4.9 MIL-STD-188-124A and NEC Compliance Evaluation.

1.4.9.1 Measurements. This portion of the survey is performed to determine if the facility complies with the requirements of the MIL-STD-188-124A as applicable to military installations in regard to grounding, bonding, and shielding. Powerline and equipment grounding conductor current measurements, not related to the NEC, are made at the time of the survey for convenience. Survey form contained in Section 2.2.2.4 Part IV is provided. Guidance in making the current measurement is provided in Sections 2.3.2.4 and 2.3.3 Part IV. Prepare sketches, as appropriate, that may aid in explaining the results of the survey or illustrating the installation. Attach the sketches to the survey data.

a. The verification required by some steps may involve more than an inspection. For example, in verifying that all neutral conductors are color-coded white or natural gray, if a green colored wire is found connected to the neutral bus it will be necessary to trace out the conductor to determine its proper function. If the verification is not accomplished at the time of the inspection, the discrepancy should be recorded on the data sheet and noted as a potential violation.

b. During the inspection, it may be desirable to correct a deficiency at that time (e.g., cleaning a bond area of paint). In such cases, record the discrepancy on the data sheet and note the corrective action taken.

1.4.9.2 MIL-STD-188-124A and NEC Compliance Inspection.

Note: Sections a(l), a(9), d(9), and d(15) are not MIL-STD-188-124A or NEC requirements but are for information.

a. Service entrance. Perform the following to determine that wiring at service entrances is in accordance with MIL-STD-188-124A requirements.

(1) Determine if the input to the facility, from the power company, is single phase or three phase, if three phase is delta or wye, and if one of the service conductors is identified (grounded). The identified conductor will be the neutral.

(2) Verify that each run of cable, conduit, etc., contains all phases and the identified conductor and that each identified conductor is grounded at or in the vicinity of and ahead of the service disconnecting means. For example, if the source is a transformer whose secondary is a 3-phase, 4-wire wye with the neutral grounded and the power is routed to the service disconnect switch through 3 conduits, each conduit must contain all 3 phases and neutral, and the neutral must be grounded in the vicinity of the service disconnect switch.

(3) For each building or service supplied by a single source, verify that the identified conductor is routed to each service disconnect switch and that the conductor is connected to the earth electrode at each building with a grounding electrode conductor that meets the requirements of Table 1-20.

(4) If the grounding electrode conductor is routed through a metallic enclosure (conduit, etc.), verify that the enclosure is bonded to the conductor at both ends.

Note: It may not be possible to verify this connection at the electrode end as it may be inaccessible.

(5) Verify that the color of the identified conductor is white or natural gray. If larger than a No. 6 AWG and of a different color (not green), it should be reidentified white or natural gray with paint or tape, or by other means such as tags or labels.

(6) Verify that the equipment grounding conductors ("safety" or "green" wire) are green or green with one or more stripes, or if larger than No. 6 AWG and of a color other than green, not white, has been reidentified with green tape, paint, or other means.

(7) Verify that all metal noncurrent carrying service equipment is effectively bonded by one of the methods specified below and that all non-conductive coating in the bonding path has been removed:

(a) Bonding jumpers connected by pressure connector, clamps, or other means.

(b) Threaded couplings and threaded bosses on enclosures with joints that are tight when rigid conduit is involved.

(c) Threaded coupling used for metallic tubing and rigid conduit is tight.

(d) Bonding jumpers are used around knockouts that are punched or otherwise formed so as to impair the electrical connection.

(e) Bonding-type locknuts and bushings on other devices.

(6) Verify that all covers for wireways, junction and pullboxes, surface raceways, etc., are installed and secured.

(9) Using a clamp-on ammeter, measure the current in each phase conductor and the identified service conductors. Also measure the current in the grounding electrode conductor. Record the current levels and wire sizes on Part IV of the survey form in Chapter 2.

b. Separately derived power sources. For premises derived sources, (a premises wiring system with power derived from an on-site generator, transformer or converter windings that have no direct electrical connection to supply conductors originating in another system) perform the following for each source.

(1) Verify that the neutral conductor is grounded where the following exists:

(a) AC circuits of less than 50 volts (peak to peak) where:

1. Supplied to transformers if the transformer supply system exceeds 150 volts (peak to peak) to ground.

2. Supplied by transformers if the transformer supply system is ungrounded.

3. Installed as overhead conductors outside of buildings.

Table 1-20. Grounding Electrode Conductor Size

Size of Largest Service-Entrance Conductor or Equivalent for Parallel Conductors (AWG)		Minimum Size of Grounding Electrode Conductor (AWG)	
Copper	Aluminum or Copper-Clad Aluminum	Copper	Aluminum or Copper-Clad Aluminum[1]
2 or smaller	0 or smaller	8	6
1 or 0	2/0 or 3/0	6	4
2/0 or 3/0	4/0 or 250 MCM	4	2
Over 3/0 thru 350 MCM	Over 250 MCM thru 500 MCM	2	0
Over 350 MCM thru 600 MCM	Over 500 MCM thru 900 MCM	0	3/0
Over 600 MCM thru 1100 MCM	Over 900 MCM thru 1750 MCM	2/0	4/0
Over 1100 MCM	Over 1750 MCM	3/0	250 MCM

NOTE: Where the service conductors or the equivalent size of parallel conductors exceed 1100 MCM, the size of the grounding electrode conductor shall not be less than 12-l/2 percent of the area of the service conductor(s).

‘Aluminum or copper-clad aluminum grounding conductors shall not be used where in direct contact with masonry or the earth or where subject to corrosive conditions. Where used outside, aluminum or copper-clad aluminum grounding conductors shall not be installed within 45 cm (18 inches) of the earth.

(b) The source can be grounded such that the maximum voltage to ground on the ungrounded conductors does not exceed 150 volts.

(c) Where the source is nominally rated 480/277-volt, 3-phase, 4-wire wye in which the midpoint of one phase is used as a circuit conductor.

(d) Where the source is nominally rated 240/120-volts, 3-phase, 4-wire wye in which the midpoint of one phase is used as a circuit conductor.

(e) Where a grounded service conductor is uninsulated.

(2) Where a source is grounded, verify that the installation complies with 1.4.9.2b(1). Also see Article 250-26 of the NEC.

c. Power transfer and bypass switches. If the facility contains power transfer and/or bypass switches, perform the following for each switch:

(1) Verify that an identified conductor, if used, is brought into the switch from each power source.

(2) Verify that the identified conductors are not grounded within the switch.

(3) Verify that the identified conductors are white or natural gray. If larger than No. 6 AWG and of another color (not green), it should be reidentified white or natural gray with paint or tape or by other means such as tags or labels.

(4) Verify that all raceways, conduits, enclosures, etc., are adequately grounded.

(5) Verify the phase, identified and grounding conductors brought into the switch from each source are routed together.

(6) Verify that output phase, identified and grounding conductors are routed together.

d. Power panels. For power panels, excluding service entrance, verify the conditions listed below. In some instances, steps 11 through 14 may be more readily accomplished by working back from the equipment or load end.

(1) Verify that the phase, identified and equipment grounding conductors are routed into the panel together through the same conduit, raceway, cable, etc.

(2) Verify that the identified conductor is connected to the neutral bus.

(3) Verify that the neutral bus is not grounded.

(4) Verify that all wires connected to the neutral bus are white or natural gray or if larger than a No. 6 AWG and of a different color, not green, have been reidentified with white or natural gray paint or tape or by other means such as tags or labels.

(5) Verify that no green, white or natural gray wires are used as phase conductors, or if white (but not green), have been reidentified with paint, tape, tags, or labels.

(6) If an equipment grounding conductor is a separate conductor brought into the panel, verify that it is bare, or if insulated, that it is green, or green with one or more stripes, or if larger than a No. 6 AWG and of another color, not white, it has been reidentified with paint, tape, or tags.

(7) If the equipment grounding conductor is an insulated or bare wire, verify that it is connected either to the ground bus or if the bus does not exist, that it is connected to the frame of the panel with UL-approved connectors.

(8) The equipment grounding conductor is a separate conductor, must be run in the same conduit as the feeder, and should be wrapped around the insulated conductors.

(9) Using a clamp-on ammeter, measure the current in each input phase, the identified conductor, and the equipment grounding conductor. Record the data on Part IV of the survey form in Chapter 2.

(10) Verify that bonds in the ac or dc power systems are not dependent upon solder for their electrical and mechanical connections. Solder may be used only to supplement mechanical connections to lower the overall impedance in RF/signal circuits or subsystems.

(11) Verify that all related phase and equipment grounding conductors ("safety grounds") to all circuits supplied by the panel are routed through the same conduit, raceway, cable, etc.

(12) Verify that all separate equipment grounding conductors leaving the panel are green or green with one or more yellow stripes or bare. If larger than No. 6 AWG and of another color, not white, they shall be reidentified with paint, tape, tags, or other means at each end and at all places where the conductor is accessible. Bare conductors should not be utilized where EMI or TEMPEST must be considered.

(13) Verify that the equipment grounding conductor for each circuit is at least as large as that given in Table 1-21 based upon the size of the overcurrent device protecting the circuit phase conductors.

(14) Verify that all bonding connections are made through surfaces that have been cleaned of insulating finishes or by some method, i.e., gouging locknuts fully tightened, that inherently accomplishes the same result.

(15) Using a clamp-on ammeter, measure the current in each equipment grounding conductor leaving the panel. Record the current on Part IV of the survey form in Chapter 2.

e. Wireways, raceways, cable trays. For all wireways, raceways, cable trays, etc., verify the following.

(1) All covers, where applicable, are in place and properly secured.

(2) All sections are electrically connected, and any insulating finishes in the bonding path have been removed.

(3) If the wireway, raceway, cable tray, etc., contains neutral or equipment grounding conductors that have been reidentified, verify that reidentification is accomplished at various intervals throughout their length.

f. Equipment. For all equipment, verify the items listed below. In some instances, verification may require that the equipment be shut down.

Table 1-21. Equipment Grounding Conductor Size Requirement

Rating or Setting of Automatic Overcurrent Device of Equipment Circuit.	Size	
Amperes	Copper Wire No.	Aluminum or Copper-Clad Aluminum Wire No.
15	14	12
20	12	10
30	10	8
40	10	8
60	10	8
100	8	6
200	6	4
400	3	1
600	1	2/0
800	0	3/0
1000	2/0	4/0
1200	3/0	250 MCM
1600	4/0	350 MCM
2000	250 MCM	400 MCM

(1) Where the equipment grounding conductor is a separate conductor, verify that the conductor is routed through the same conduit, raceway, etc., as the phase and neutral conductors.

(2) Verify that the equipment grounding path back to the power panel is continuous and that any insulating finishes in the grounding path have been removed.

(3) Verify that the size of the equipment grounding conductor is at least as large as that listed in Table l-21 for the overcurrent device serving the equipment.

(4) Verify that the neutral is not connected to the chassis or frame of the equipment. This may be verified visually or with an ohmmeter.

g. Isolation of neutral conductor. When it is possible to deenergize a facility, or a portion thereof, perform the following test:

(1) With the electrical power removed disconnect the facility neutral from ground or in the case of a portion of the facility (e.g., a power panel) the incoming neutral. See Figure 1-47.

(2) Measure the resistance between the neutral bus and the equipment grounding conductor or panel frame. A low value of resistance (< 10 ohms) indicates that the neutral may be grounded at some place other than at the first service disconnect. Grounding of the neutral at places other than at the first service disconnect violates the MIL-STD-188-124A and the NEC and will result in power current flow through the equipment ground network.

1.4.9.3 Correction of Deficiencies. The results of the survey should be thoroughly reviewed to determine the overall impact of correcting the deficiencies. Complete and strict compliance with the requirements of MIL-STD-188-124A and the NEC is required. However, some corrections could be expensive and not result in any improvement in the operation of the facility. Some types of deficiencies should be corrected. Presented below is a listing of violations that could be encountered and possible corrective actions.

a. Undersized equipment grounding conductor, replace with proper size conductor.

b. Equipment grounding conductor and/or neutral conductor not routed with phase conductors. Reroute the grounding and/or neutral conductor to be in the same raceway as the phase conductors.

c. Equipment is not grounded by means of an equipment grounding conductor meeting the requirements of 1.4.9.2d(7) or 1.4.9.2d(8) but is grounded by means of its installation (e.g., mounted in a rack). Ground the equipment by means of a separate green or identified conductor routed with the phase and neutral conductors.

d. Neutral bus in power panel (other than service entrance) is grounded to the panel frame. Remove the grounding connection.

e. A green wire connected to the neutral bus is found to be connected to an equipment chassis and is supposed to be the equipment conductor. Disconnect the conductor from the neutral bus and reconnect it to the ground bus or panel frame with UL-approved connectors.

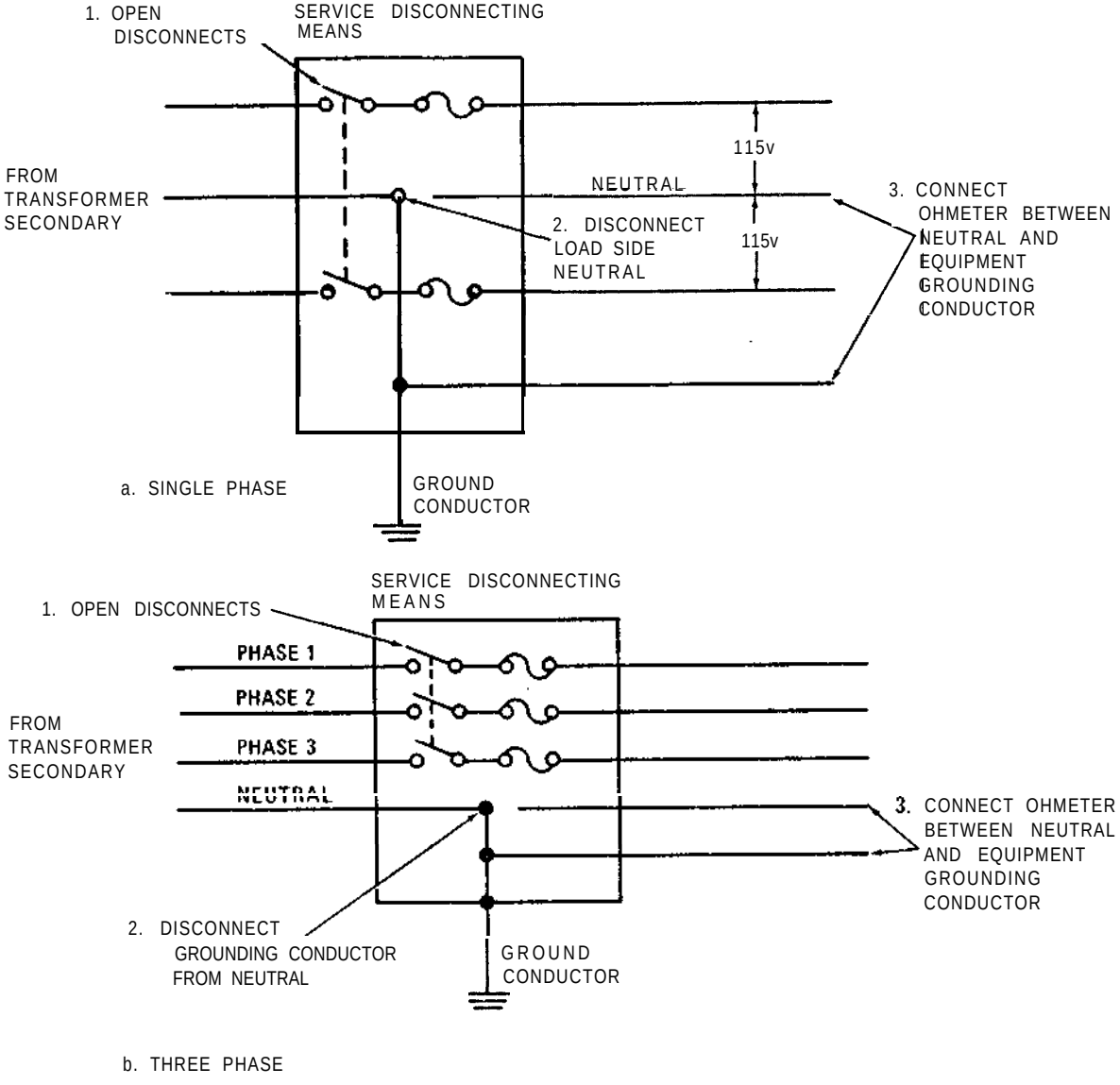

Figure 1-47. Method for Determining the Existence of Improper Neutral Ground Connections

f. Bond is obtained through a painted surface. Disassemble, remove paint and reassemble. Protect with waterproof paint if exposed to moisture.

g. A black wire, not reidentified, is found to be used as an equipment grounding conductor. If it is larger than a No. 6 AWG, it may be reidentified with green paint or tape or by other means at each end and wherever accessible. If smaller than No. 6, it should be replaced to comply with the NEC. However, an acceptable substitute would be to reidentify it with green paint or tape if replacement is impractical or expensive.

h. Grounding conductor is routed through conduit and the conduit is not grounded. Ground the conduit at both ends by means of a grounding bushing or clamp, a jumper wire, and a split-bolt connector. The jumper wire is to be the same size as the grounding conductor.

i. Service neutral is not grounded but equipment enclosure is grounded by means of a grounding conductor. Ground the neutral by connecting it to the grounding conductor/bus in the first service disconnect.

j. Conductor insulation is damaged and conductor is exposed. Conductor should be replaced. Alternate correction is to cover the damaged area with insulating tape until the insulation of the repaired area is equal to the insulation of the conductor.

k. Power panel is grounded by a soldered connection. Provide supplemental grounding by means of a bolted grounding connector.

l. Ground bus is not grounded and equipment grounding conductors terminate at equipment frame, not at receptacles. Connect ground bus to panel frame by means of UL-approved connectors.

m. Raceway contains neutral and grounding conductors of different systems (e.g., commercial and regulated power) and conductors are not distinguishable. Distinguish conductors from each other by means of paint, tape or tags. Alternately, tie the phase, neutral and equipment grounding conductors of each system together.

1.5 SIGNAL REFERENCE SUBSYSTEM FOR NEW FACILITIES.

1.5.1 Higher Frequency Network. The higher frequency network is a conductive sheet, grid, or cable network mesh providing multiple low resistance paths between any two points within the structure and between any point in the structure and the earth electrode subsystem. It consists of three primary components: (1) equipotential plane, (2) equipment ground conductors, and (3) structural steel elements and electrical supporting structures, (see Figures 1-49, 1-50, and 1-51) connected to the earth electrode subsystem. The grounding (green) wire shall not be considered a substitute for this subsystem. The optimum interconnecting cable and mesh spacing of the equipotential plane should be 1/8 of a wavelength with regard to the highest frequency of concern. In practice this may not be feasible and the interconnecting cable and mesh spacing should therefore be as short and small as practical.

THIS PAGE INTENTIONALLY LEFT BLANK

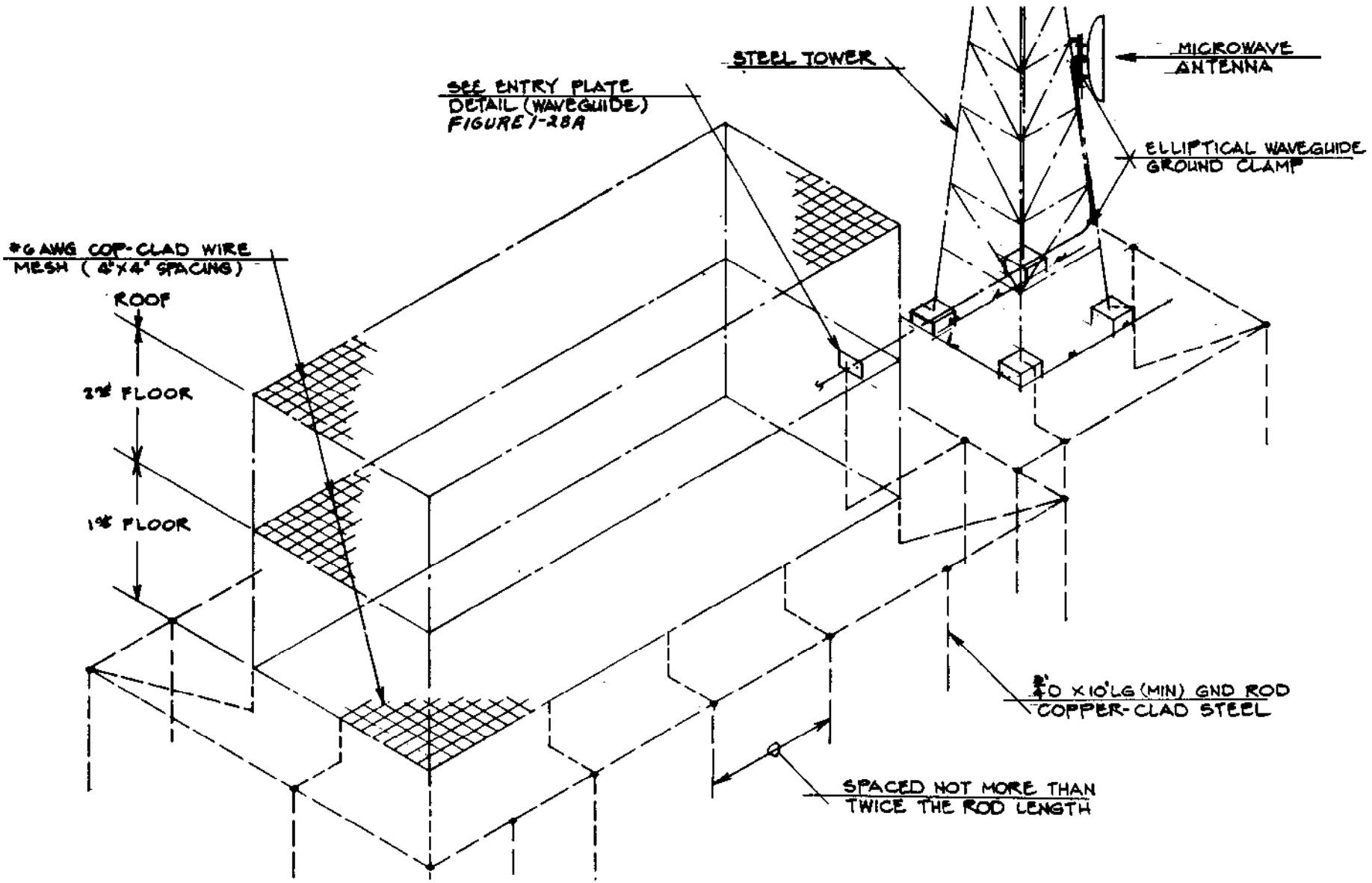

Figure 1-49. Typical Equipotential Ground Plane for Multi-Deck Building

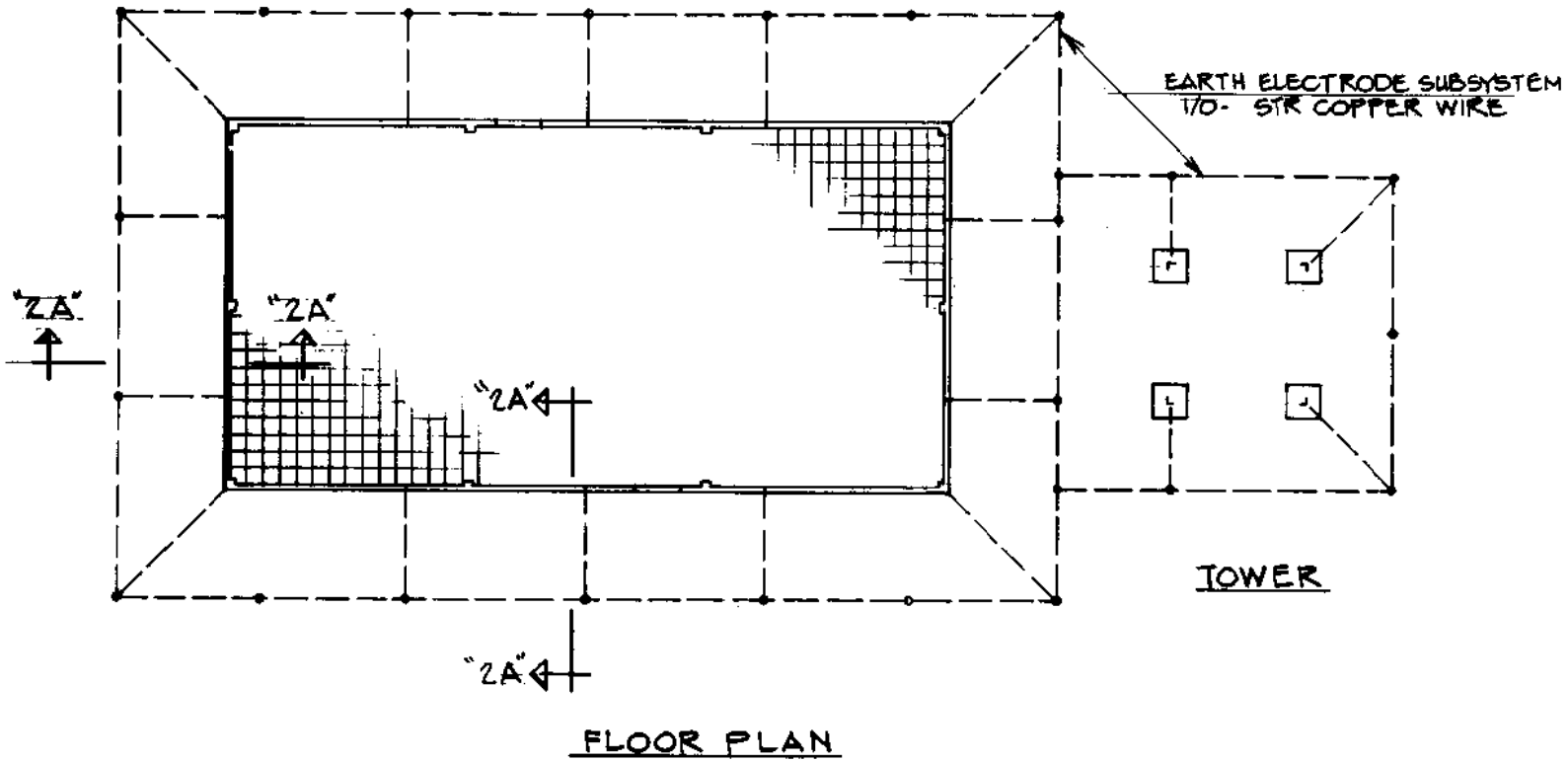

Figure 1-50. Typical Building Floor Plan (Top View)

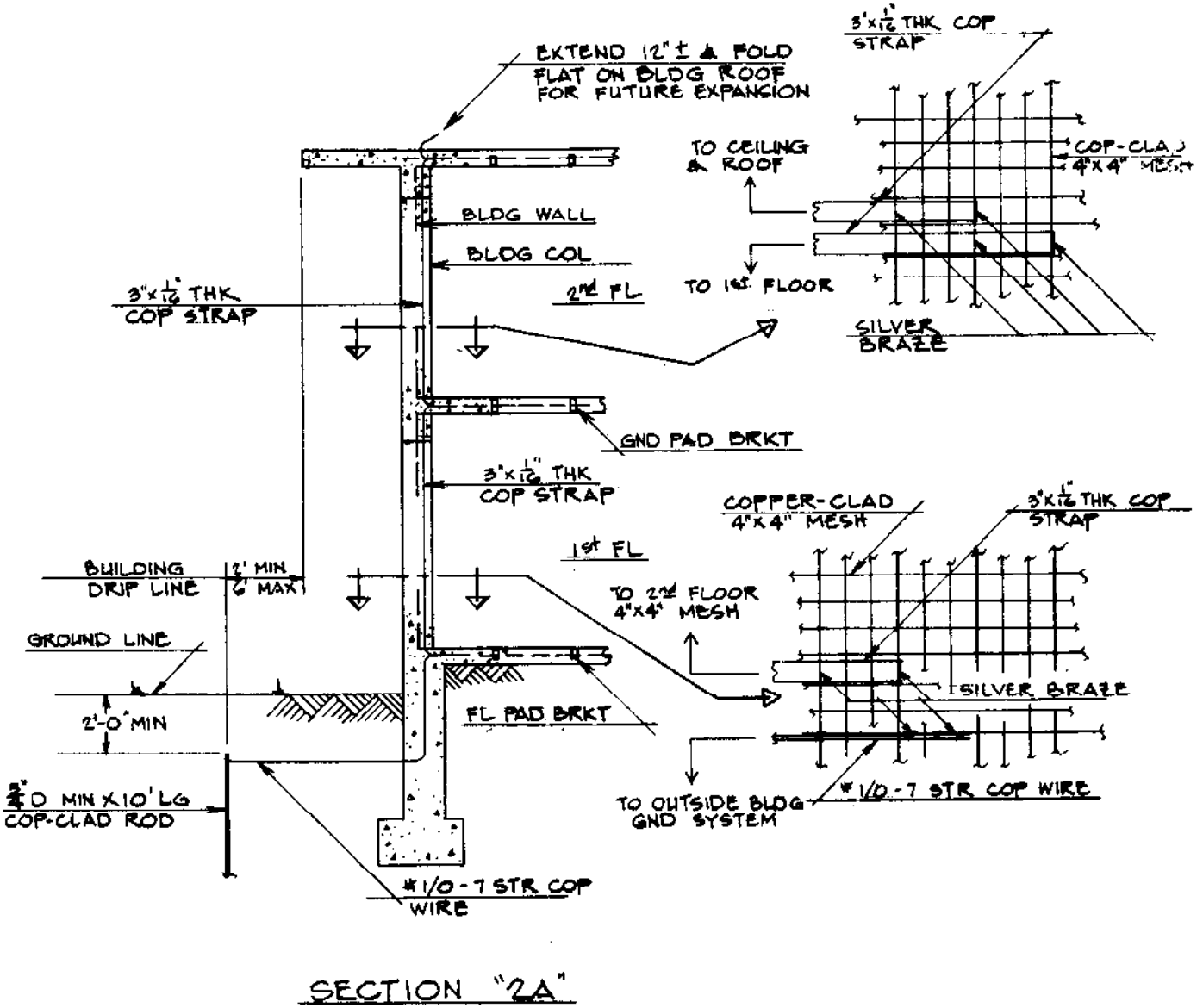

Figure 1-51. Typical Multi-Deck Building Plan (Side View)

a. In steel frame buildings, make all structural members of the building (e.g., building columns, wall frames, roof trusses, etc.) electrically continuous by bonding each joint and interconnection with a welded, brazed, soldered, or high-compression bolted connection. Where direct bonds of these types are not possible, bridge the joint with a l/0 AWG stranded copper cable both ends of which are brazed, welded, or bolted in place. This does not include rebars.

b. Connect the bonded structural steel network to the earth electrode subsystem with 1/0 AWG copper cables. The distance between adjacent connections from the building structure to the earth electrode subsystem should not exceed 15 meters (50 feet).

c. Where steel frame construction is not used, install a supplemental network consisting of large copper cables conforming to Table 1-22.

d. Equipment cabinets, electrical supporting structures, and utility pipes are to be connected to this structural steel or copper cable grid (equipotential plane) with #6 AWG copper wire. This interconnecting wire should be as short as feasible, preferably not over 24 inches to minimize high frequency reactance. (Electrical supporting structures include all the conduit, raceways, switch and breaker panels, and other hardware (not energized) commonly associated with the communication electronic facility.)

1.5.1.1 Multipoint Ground System. The multipoint ground system requires the existence of an equipotential ground plane for the system. Such an equipotential plane exists in a building with a metal floor or ceiling grid electrically bonded together, or in a building with a concrete floor with a ground grid embedded in it, connected to the facility ground. Equipment cabinets are then connected to the equipotential plane. Chassis are connected to the equipment cabinets and all components, signal return leads, etc., are connected to the chassis. The equipotential plane is then terminated to the earth electrode subsystem to assure personnel safety and a low impedance path for lower frequency signals.

At higher frequencies, the large conducting surface, embedded in the floor or the metallic raised floor under the equipments to be grounded, presents a much lower characteristic impedance than a signal wire, even if both were improperly terminated. This is true because the characteristic impedance (Z_o) is a function of L/C. As capacity to earth increases, Z_o decreases. Normally, the capacity of a metallic sheet to earth is higher than that of wire. If the size of the sheet is increased and allowed to encompass more area, the capacitance increases. Also, the unit length inductance decreases with width, which further decreases Z_o. If the dimensions of a metallic sheet increase extensively (as in the case of a conducting subfloor), the characteristic impedance approaches a very low value. In this case, even if improperly terminated, the impedance would be quite low throughout a large portion of the spectrum. This, in turn, would establish an equipotential reference plane for all equipments bonded to it. With this reference plane bonded to earth, the following advantages are obtained:

a. Any “noisy” cable or conductor connected to the receptor through or along such a ground plane will have its field contained between the conductor and the ground plane. The noise field can be “shorted out” by filters and bond straps because the distance between these “transmission line” conductors is very small. Shorting out the noise field has the desirable effect of keeping noise current from flowing over the receptor case and along any antenna input cables.

Table 1-22

Size of Equipment Ground Cables

Cable Size (AWG)	Maximum Path Length (FT)
750 MCM	375
600 MCM	300
500 MCM	250
350 MCM	175
300 MCM	150
250 MCM	125
4/0	105
3/0	84
2/0	66
1/0	53
1	41
2	33
4	21
6	13
8	8
Busbar (IN.)	
4 x 1/4	636
4 x 1/8	318
3 x 1/4	476
3 x 1/8	238
2 x 1/4	318
2 x 1/8	159
2 x 1/16	79
1 x 1/4	159
1 x l/8	79
1 x l/16	39

b. Filters at the interface terminals of equipment can operate more effectively when both terminals of their equivalent "transmission line" are available. As in a, above, a large conducting surface makes it possible to contain the field carried by the offending conductor, in such a way that it can be more easily prevented from traveling further.

c. A large conducting surface will also provide isolation between any rooftop antennas and from cable runs below it.

1.5.1.1.1 Types of Equipotential Planes. Conducting media that can be utilized for the equipotential plane are (a) a copper grid embedded in the concrete floor or raised metal floor such as computer floor, (b) a subfloor of aluminum, copper, phospher bronze screen or sheet metal laid underneath the floor tile or carpet, or (c) a ceiling grid above the equipment. The grid openings should not be larger than 1/20 wavelength at the highest frequency of concern up to four inches. As a design objective (DO) the grid openings should not be larger than four inches. The following equipotential planes may be utilized on new facilities or those facilities undergoing a major rehab, or upgrading of communications electronics equipments.

1.5.1.1.1.1 Copper Grid Embedded in Concrete. Since a large solid conducting surface is not economically feasible for some installations, a ground reference plane, made up of a copper grid, or copperclad construction mesh with 4 inch openings may be embedded in the concrete with ground risers installed to the surface of the concrete as shown in Figure 1-54. The mesh is commercially available in AWG wire sizes Nos. 6, 8, 10, and 12. It is normally furnished in 3.7m (12 foot) rolls, but can be obtained in various widths up to 5.5m (18 feet). See Figure 1-52. Where sections of mesh are joined together, there should be a one foot overlap and bonded together every two feet by welding, brazing, or manufactured connectors that are connected to the grid and give grounding access at the floor surface. See Figures 1-53, 1-54, 1-55, and 1-56. Normally, if the grid is embedded in a concrete floor, the latter method provides the easiest grounding source. The equipotential plane shall be welded to the main structural steel of the building at multiple locations. Where frame buildings are utilized the plane is connected to the earth electrode subsystem at multiple locations using l/0 AWG copper conductors. If metal floor systems are used (metal floors with concrete poured over the floor) then the floor system itself can be used as the equipotential plane. In fact, this would be the preferred method of establishing the plane.

1.5.1.1.1.2 Equipotential Plane Under Floor Tile or Carpet. An equipotential plane can be realized by installing a metal sheet or roll of either aluminum, copper, or phospher bronze under the floor tile or carpet. This sheet may be either thin gauge solid metal or window screen type material bonded to the floor with mastic and tile or carpet installed on top of it. In existing facilities where equipments are already installed, the plane need not be installed under the equipment cabinets, but must be bonded to the cabinets on all four sides. The plane shall be bonded to the main structural steel members of the building at multiple locations. The structural steel shall in turn be bonded to the earth electrode subsystem.

1.5.1.1.1.3 Overhead Equipotential Plane. Where it is not practicable to install a plane on the floor around the equipment, it is possible to install an overhead equipotential plane in or on the ceiling of the equipment room. This can be accomplished by installing either thin metal sheets or screen either above or on the ceiling. Care must be taken to keep bonding straps from the equipment to the plane as short as possible. Generally phospher bronze screen is used in this application because it is light, durable, and easy to work. The plane must be connected to the building steel which in turn is bonded to the earth electrode subsystem.

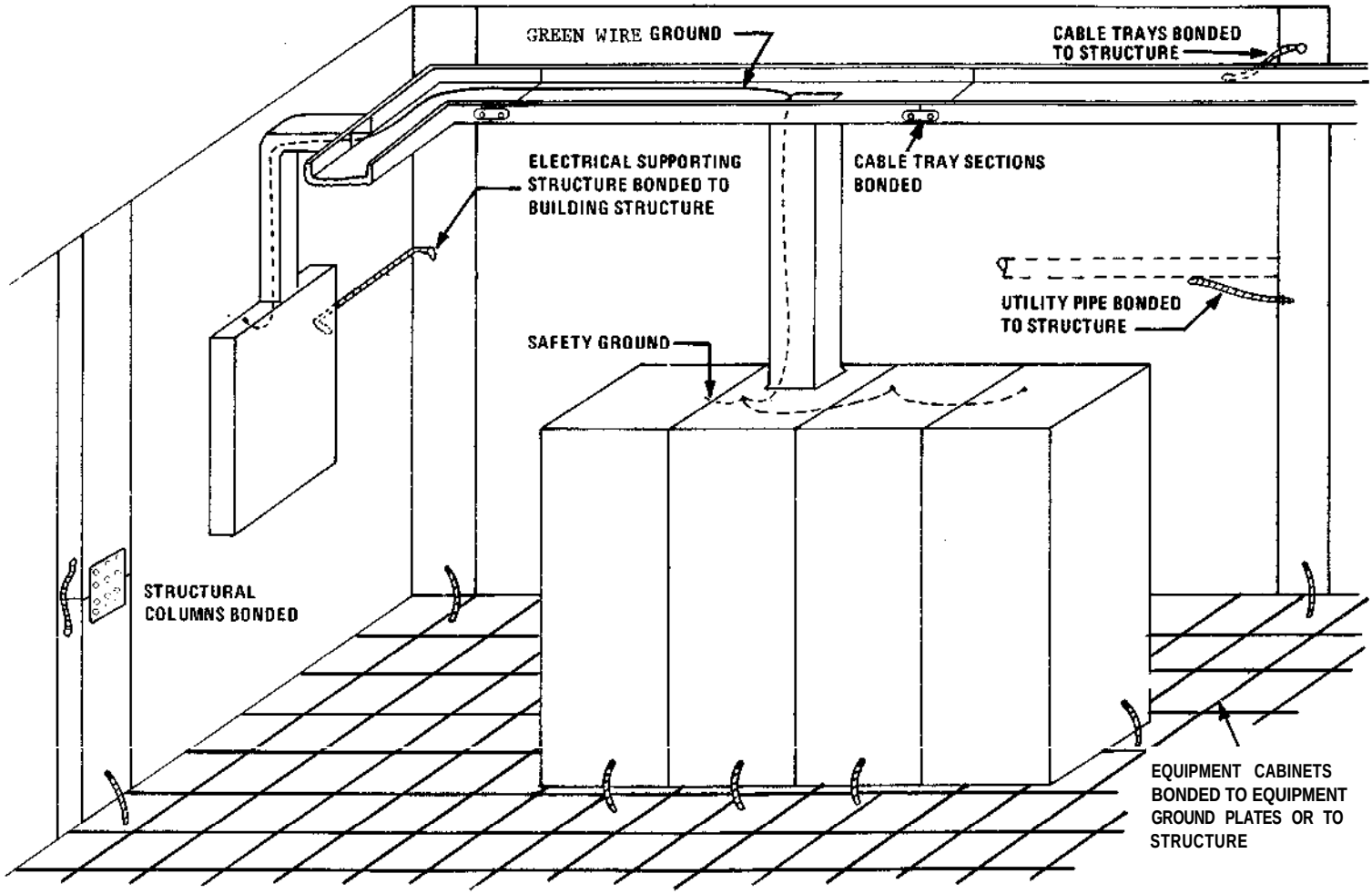

Figure 1-52. Elements of the Facility Ground System (with Grid)

1.5.1.1.1.4 Raised (Computer) Flooring. Raised floors are used to structurally support equipment cabinets and provide a space between the original facility floor and raised floor plates for cabling, air plenum or air conditioning ducting, piping, drains, etc. Raised floors provide an esthetic room appearance. Three general types of floor systems manufactured are: (a) the bolted-grid (stringer) or rigid grid system, (b) the drop-in grid or removable grid type, and (c) the free-standing, stringerless or pedestal-only type. Only type (a) is acceptable as an equipotential plane.

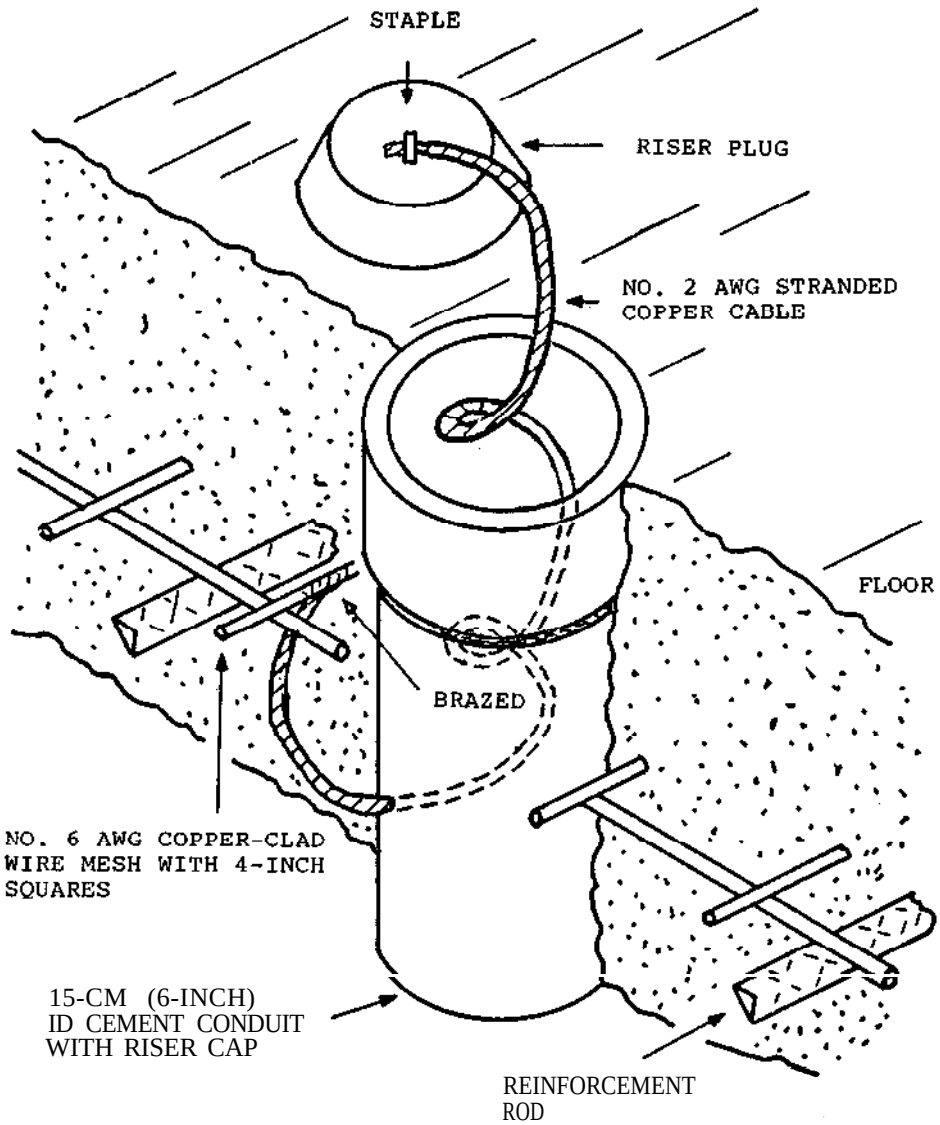

Figure 1-53. Typical Equipotential Ground Plane for New Construction Higher or Hybrid Frequencies Facilities Installation

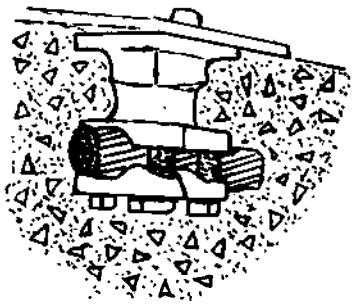

FOR FLAT BAR TO GROUND CABLE IN CONCRETE

USE: These Ground Connectors are attached to a ground cable (Equipotential plane) in the floor, and after the concrete is poured, a 2" X 2" flat plate is left exposed, flush with the finished surface. The connectors may be located at predetermined locations, or if set at intervals throughout the floor or wall base, a ground pad is always readily available for grounding electrical equipment. Contact surface of fitting is 2" square and comes with either two or four 1/8" D&T holes which can be used for connection purposes. This equipotential plane is bonded to the earth electrode subsystem at numerous points.

Figure 1-54. Ground Connector for Equipotential Plane in Concrete

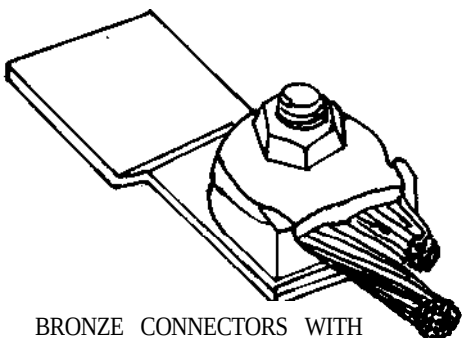

BRONZE CONNECTORS WITH BRAZED-ON STEEL TONGUE -- For Welding Steel Tongue To Existing Structure

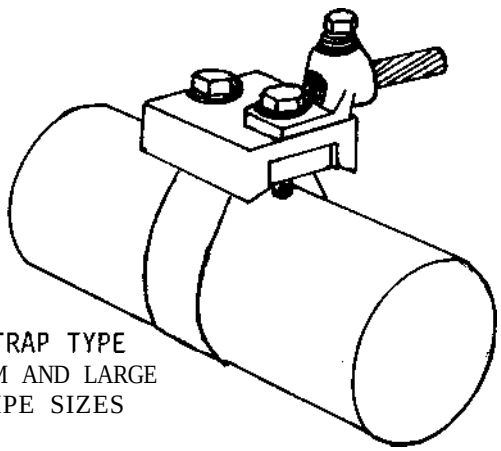

STRAP TYPE
MEDIUM AND LARGE PIPE SIZES

NOTE: Bolts furnished will fasten connector to plate up to ¼" thick. Longer bolts will be furnished when required.

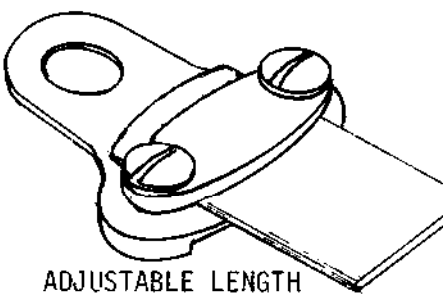

ADJUSTABLE LENGTH
STRAP CONNECTOR

Figure 1-55. Typical Ground Connectors

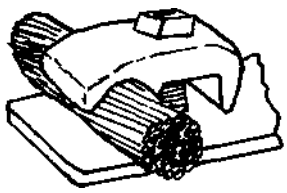

1 Piece Design

FOR CABLE TO
FLAT BAR

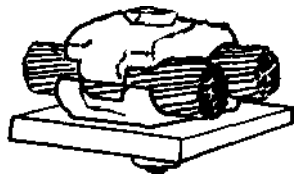

1 Bolt

FOR TWO PARALLEL
CABLES TO FLAT BAR

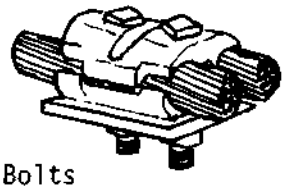

2 Bolts

FOR TWO PARALLEL
CABLES TO FLAT BAR

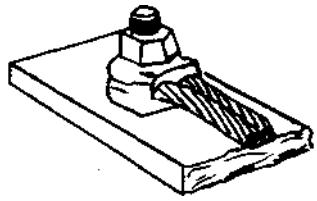

FOR CABLE TO
FLAT BAR

NOTE: Bolts furnished will fasten connector to plate up to ¼" thick. Longer bolts will be furnished when necessary if plate thickness is specified.

Figure 1-56. Examples of Cable to Bar Ground Connectors

1.5.1.1.1.4.1 Bolted-Grid (Stringer) or Rigid Grid System Raised Floors. Shown in Figures 1-58, 1-59, and 1-60 are bolted-grid floor systems. The systems are similar to the drop-in grid except the grids, when properly installed, are securely bolted or clamped in place. The drop-in panels must be metal or wood with metal plate on both sides with a selected floor covering. They should be no larger than 24" x 24". Although the panels may not make a good low resistance contact with the stringers, the high distributed capacity makes the floor appear to be an electrically continuous sheet at rf frequencies. The equipment cabinets shall be connected to the floor stringers by bonding straps which must be kept as short as possible. This will provide a low impedance path to earth at the lower frequencies. Materials used for stringers and pedestal heads are steel and aluminum. Raised flooring to be used for equipotential planes should be purchased to conform to the requirements of MIL-F-29046 (TD).

In general, the grounding aspects of raised flooring have been excellent. Problem areas that designers should be aware of are:

a. Installation practices. Inadequate bonded joints between pedestal heads and stringers have sometimes resulted from poor installation practices primarily due to:

(1) pedestal heads heavily oxidized and dirty when bolted,

(2) use of poor bolting hardware (speed nuts, sheet metal screws), or

(3) bolting hardware not installed or not properly tightened.

Clipnuts shall not be used in place of standard nuts since they generally will deform and therefore produce loose joints.

The installer may receive aluminum pedestal heads from the manufacturing plant that are heavily oxidized. The joint surface requires minor abrasion and perhaps a light coating of a joint protective compound. The joint compound should be particularly considered for non-carpeted floors where moisture, cleaning compounds and wax would settle, degrading the joint (sometimes severely) in a several year period.

The use of improper bolting hardware has caused unreliable joints. All bolted bonds must meet the requirements of Table 1-23. Sheet metal screws have on occasion been employed to support the stringer to the pedestal. Clipnuts employed in lieu of standard nuts will deform and in turn produce loose joints, and shall not therefore be used. This "clip" nut called the grip lock nut is shown in Figure 1-61. MIL-F-29046 has been modified to specifically prohibit the use of such type of hardware.

It is recommended that the installation crew be briefed and the floor tested, before the floor panels are installed.

b. Floor system checkout. Composite bonds between cabinet chassis and the raised floor shall not exceed a specified resistance value, usually 1 milliohm. Typically, a pedestal head to stringer resistance will read about 40 micro-ohms and should not exceed 100 micro-ohms. For additional information see MIL-F-29046.

c. Resistance measurement equipment. The instrument recommended to obtain resistance measurements of 100 micro-ohms for these measurements is a modified Shallcross Model 670A Milliohmmeter or equal.

THIS PAGE INTENTIONALLY LEFT BLANK

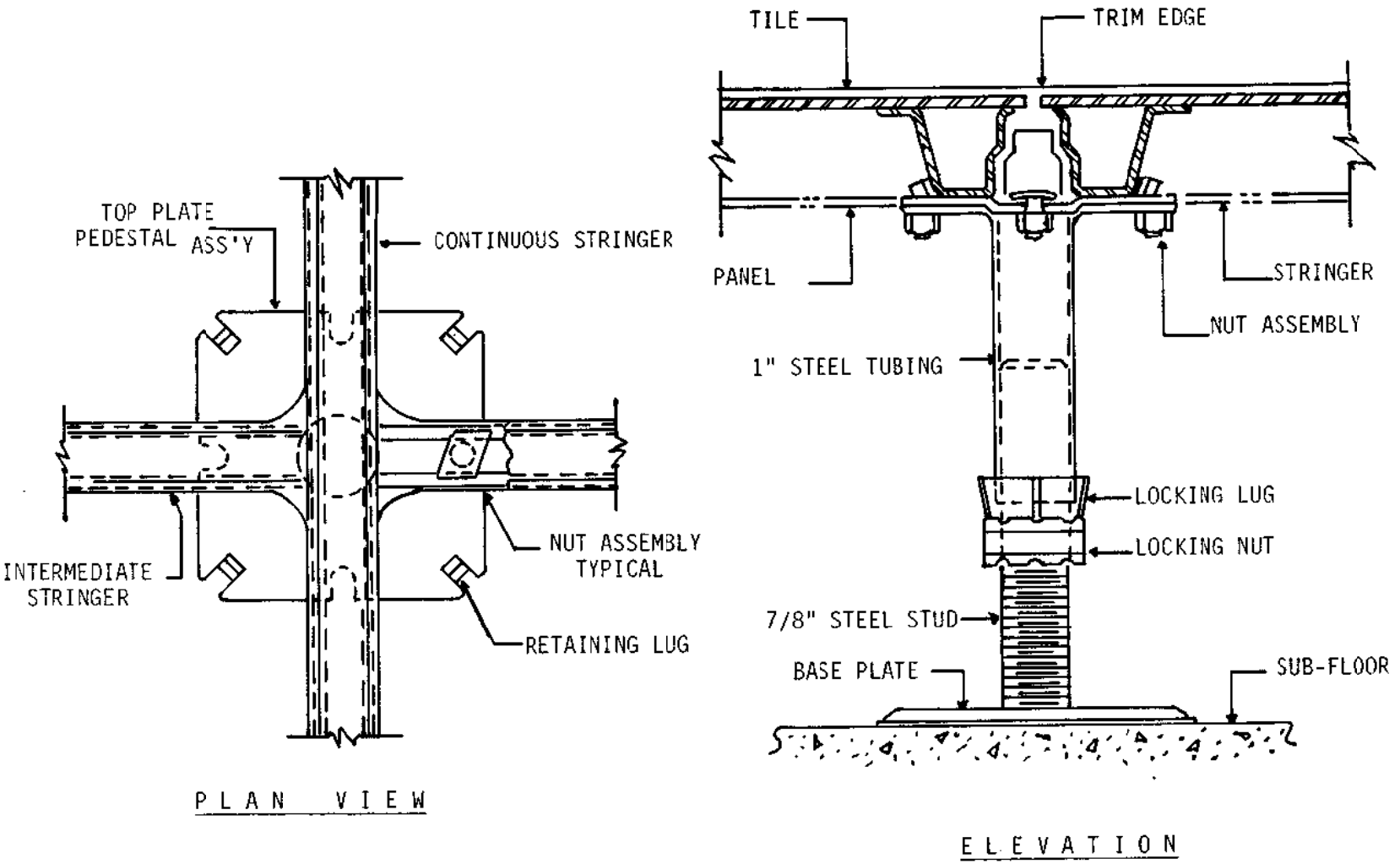

Figure 1-58. Rigid Grid Floor System Details

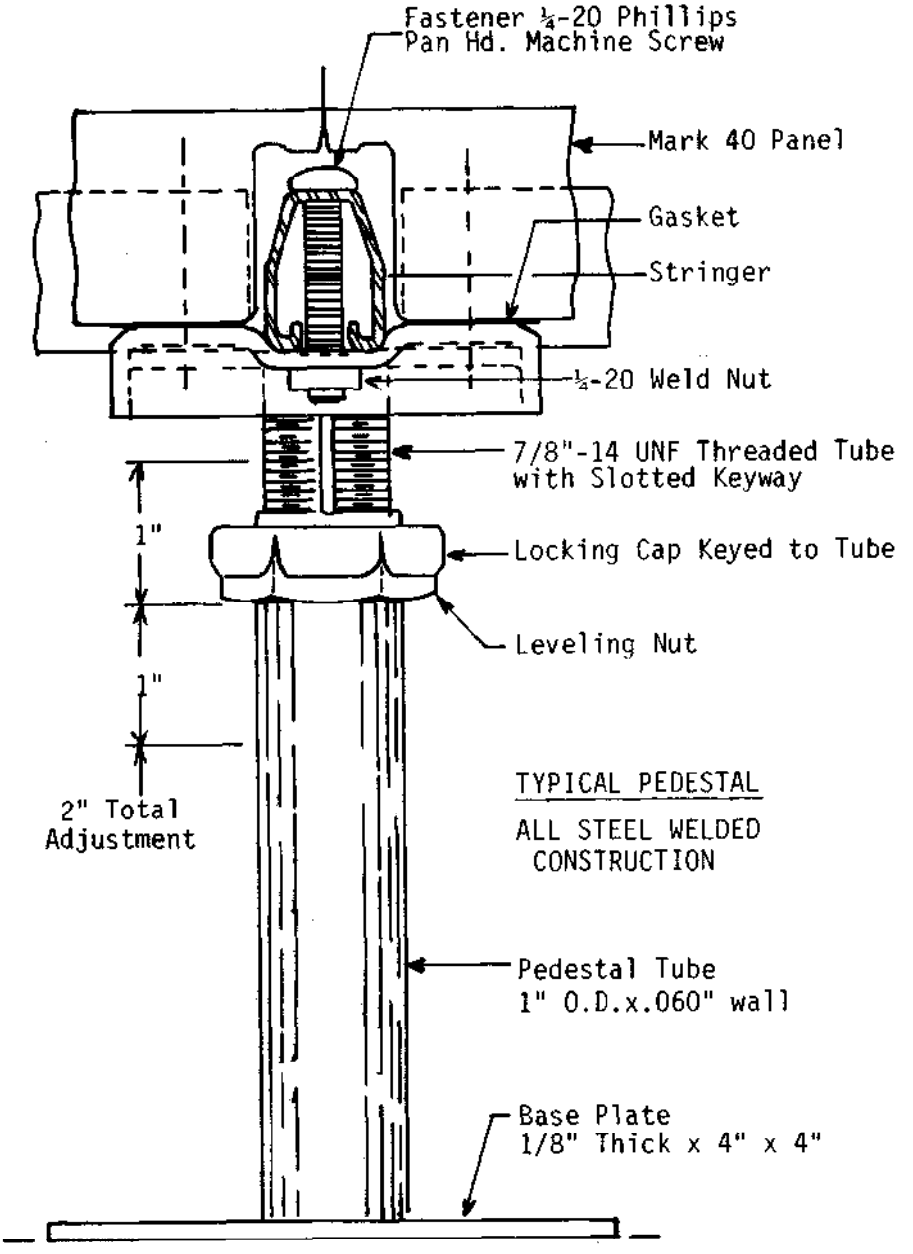

Figure 1-59. Example of Rigid-Grid to Pedestal Bolted Connection

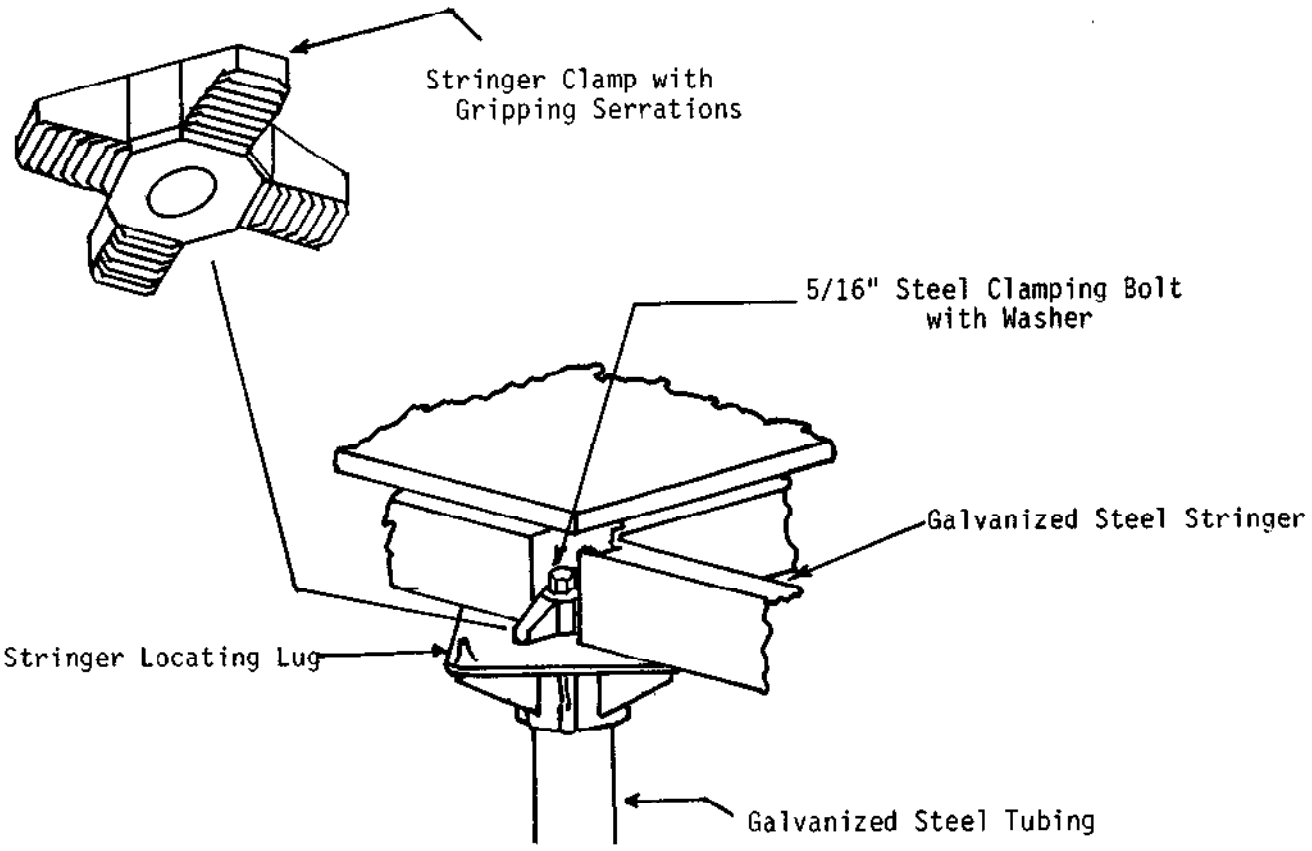

Figure l-60. Example of Rigid-Grid to Pedestal Clamped Connection

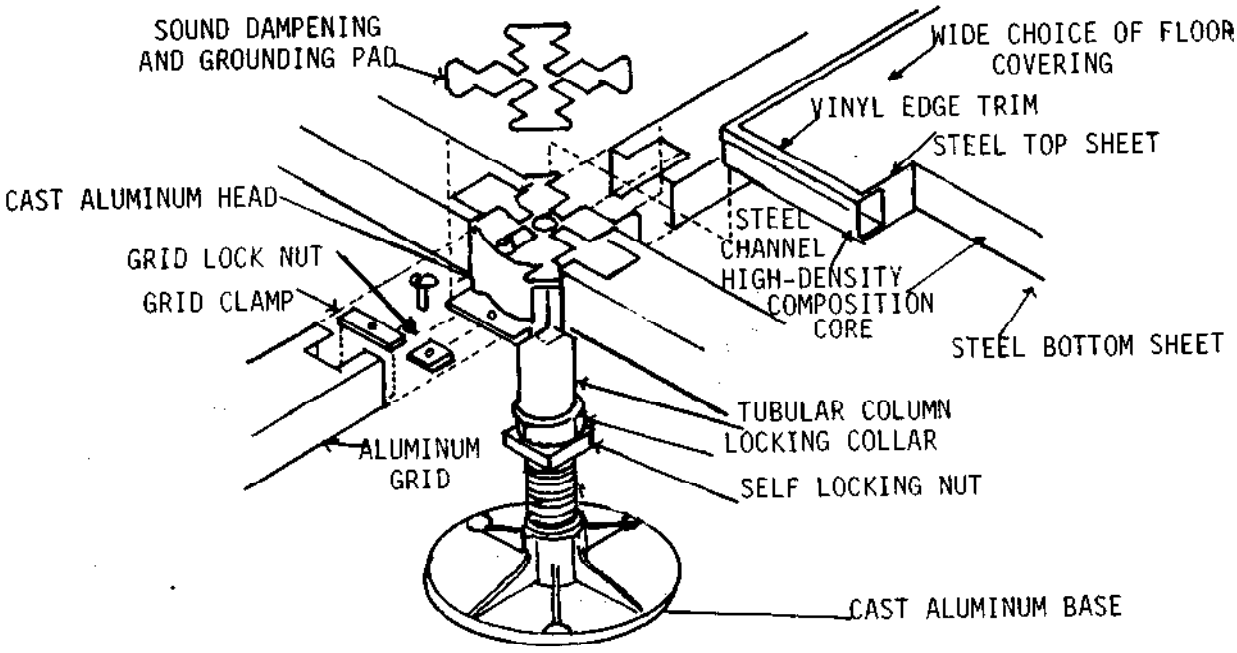

Figure 1-61. Example of Unacceptable Grid-to-Pedestal Bonding

d. Connections to the raised floor system. Connections from the equipment racks and the earth electrode subsystem to the floor are important. Clamps, if used, should be installed on the upper pedestal assembly to avoid the relatively high resistance between the lower assembly (that has the base) and the upper column. The stringer to pedestal fastener hardware can often be changed to allow bolting a bonding cable terminal directly to the pedestal head. It is feasible to obtain additional grid locking hardware and use it to bolt the bonding cable terminal to the floor grid. Another means of terminating a bonding cable is to drill a hole and bolt it to a non-heavy weight bearing stringer.

e. Corrosion control. In extremely humid environments where corrosion is common, the use of corrosion prevention compounds is recommended. Bolted joints can be covered with a non-corrosive silicone-rubber compound that will protect the joint for the life of the installation. An ice cube rubbed on the silicone-rubber will smooth it.

f. Carpeting. Carpeting selected as a floor-covering, should be of a low static or static-free type to prevent possible static discharge or component failure. See MIL-F-29046 for additional information.

g. Maintenance measurements. To determine degradation of the floor, resistance measurements and method should be documented and available so that repeat measurements can be made if ground reference subsystem problems are suspected or periodic checks for degradation made.

h. Reliability. The MIL-F-29046 specification provides information for raised floor procurements. The guidelines in this Handbook will provide a ground reference subsystem that is well-designed, properly installed and lasts for the life of the electronic system installation.

1.5.1.1.1.4.2 Drop-In or Removable Grid System. The Drop-In Grid System is shown in Figure 1-62. The grids or stringers are retained by engaging pins or depressions in the pedestal head. The stringers supply support and when newly installed provide comparatively low resistance contact to the pedestal head. Equipment cabinets resting on the floor panels provide increased contact pressure in certain areas. Severe corrosion and unreliable electrical contact have resulted due to dirt, moisture and floor cleaning/waxing compounds filtering through crevices. This floor system is also considered unsuitable for a reference plane. Floor panels resting on the pedestals and grids are commonly 24” x 24” although they may be purchased in 30” x 30” dimension.

1.5.1.1.1.4.3 Free-Standing, Pedestal-Only or Stringerless System. The pedestal-only system is shown in Figure l-63. The pedestal base is glued or "shot" in place to form the basic understructure. The pedestal heads are leveled and the floor panel is installed. The conductivity between distant pedestals is variable and unreliable, making it unsuitable for a ground reference.

1.5.1.1.1.5. Ground Risers. The type of ground riser to be used depends on the type of equipotential plane to be installed and whether the subject building will be new construction, a major modification to an existing building in which new equipments will be installed, or an existing building in which only the ground system will be upgraded while the equipments remain in place. The latter case is discussed in Section 2.2.3.

1.5.1.1.1.6 Equipment Cabinet Grounding. Each individual unit or piece of equipment should either be bonded to its rack or cabinet (see Figure 1-64), or have its case or chassis bonded to the nearest point on the equipotential plane. Racks and cabinets should also be bonded to the nearest point of the plane.

1.5.2 Lower Frequency Signal Reference Network. Lower frequency signal reference subsystems are not to be installed in communications-electronics facilities.

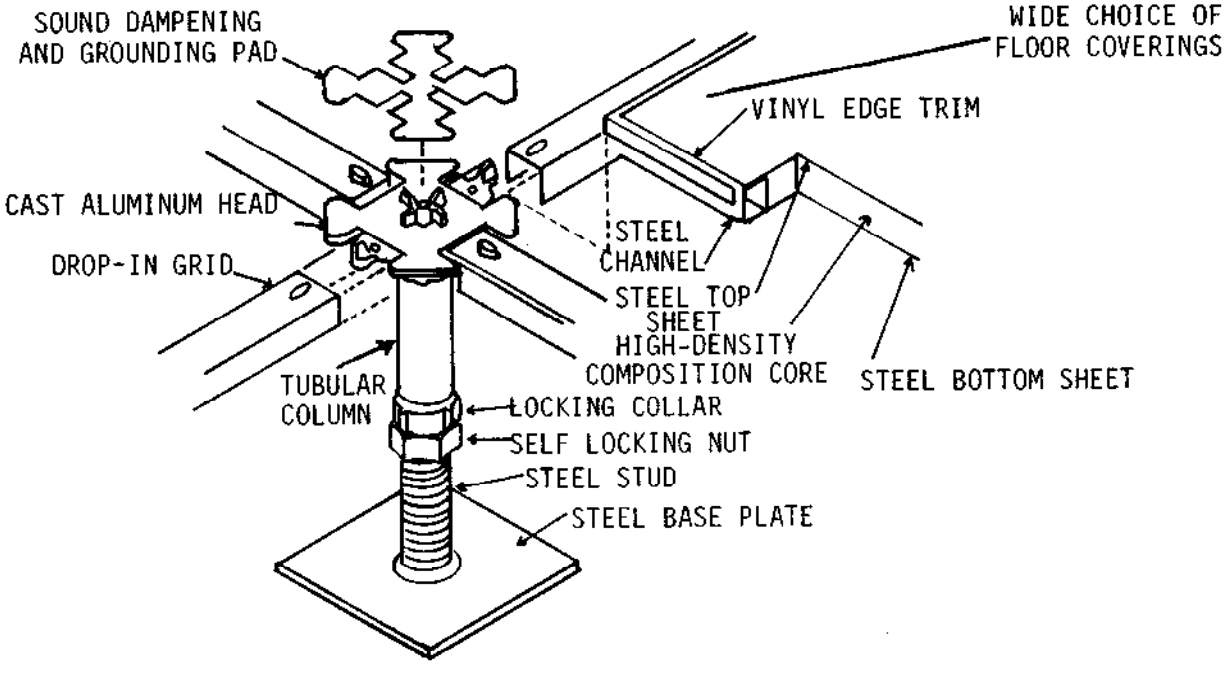

Figure 1-62. Example of Drop-In Grid Floor Construction

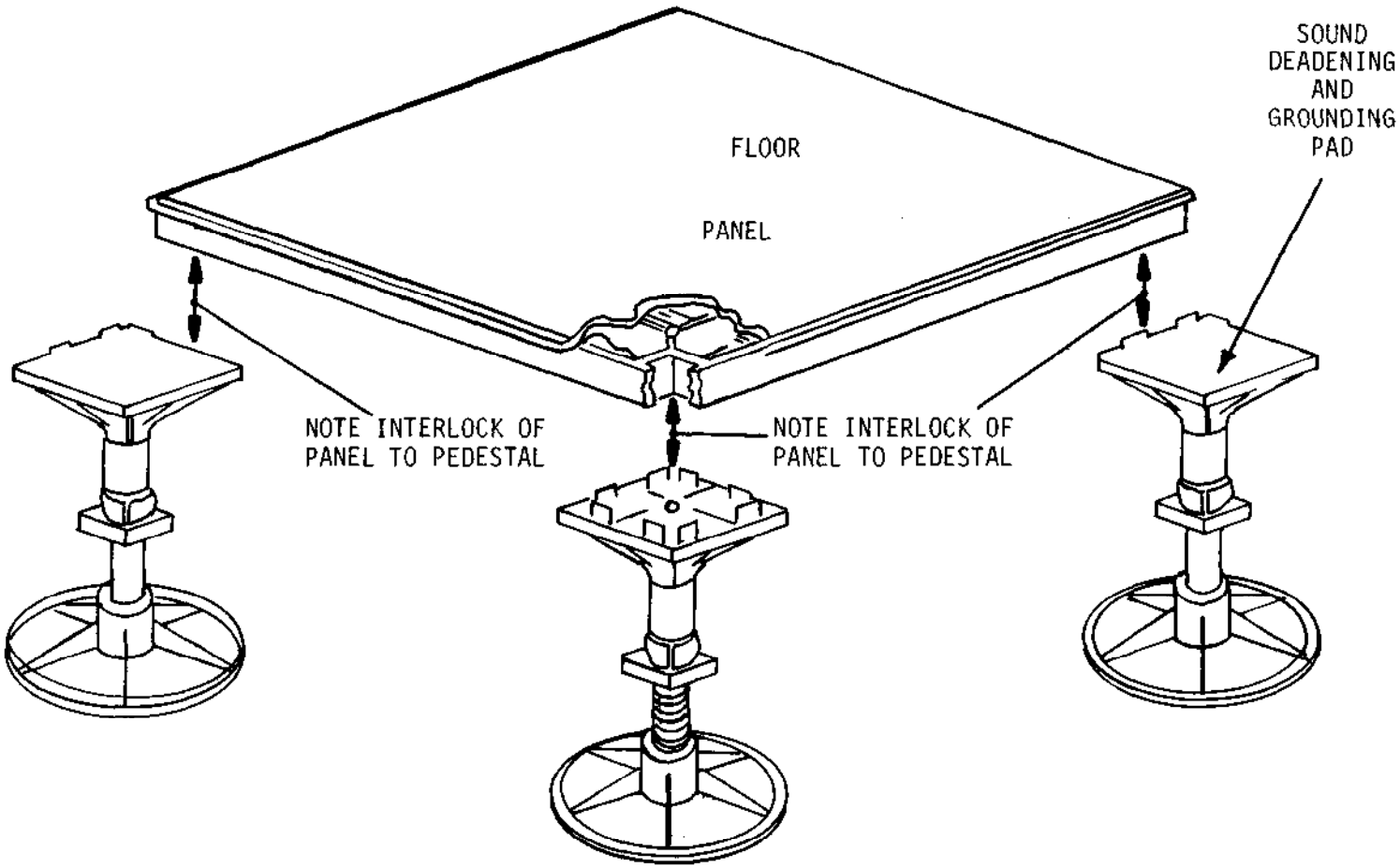

Figure 1-63. Example of Pedestal-Only Floor Construction

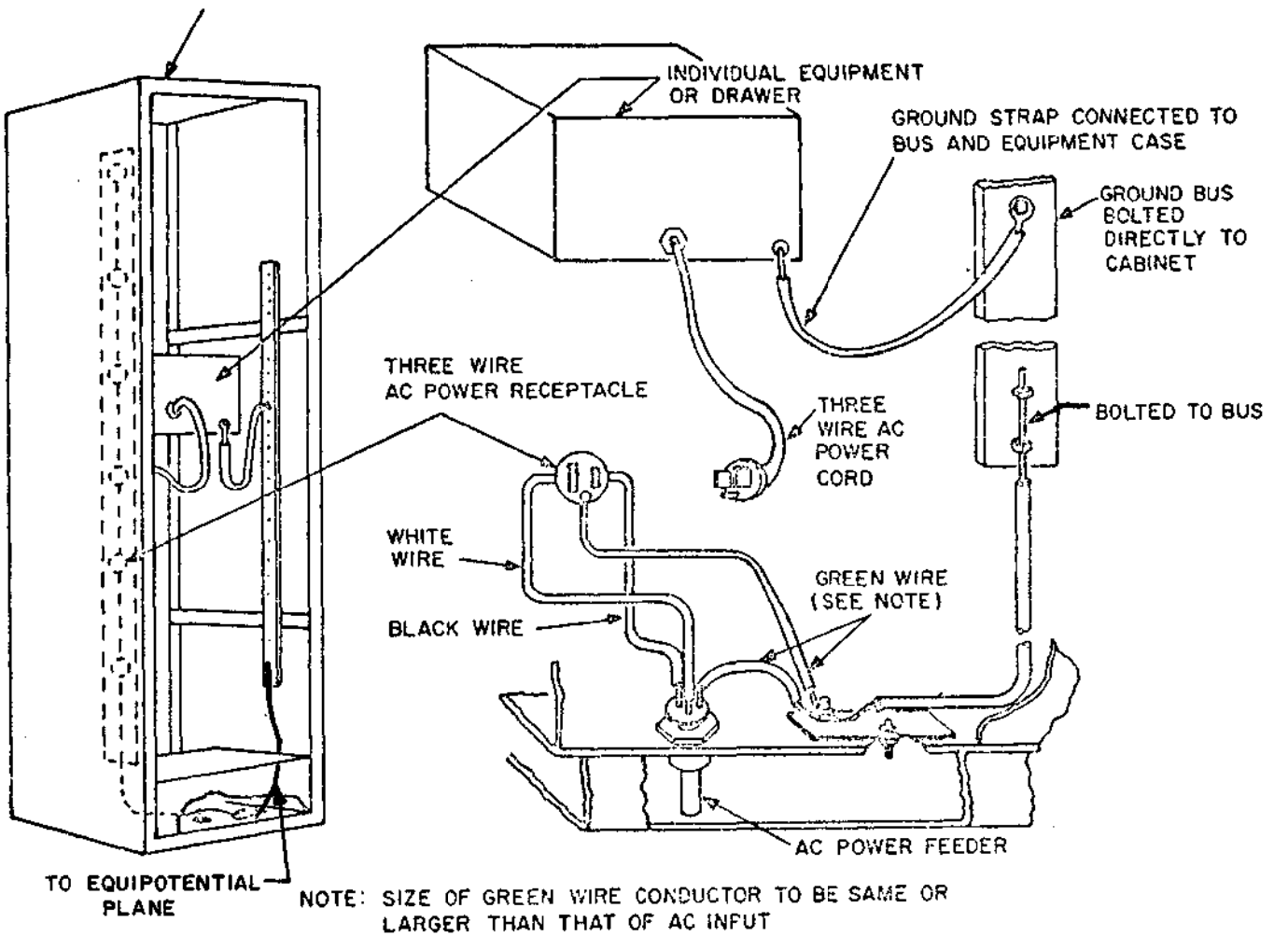

Figure 1-64. Typical Equipment Cabinet Grounding Detail

1.6 GROUNDING PHILOSOPHY FOR EQUIPMENTS PROCESSING NATIONAL SECURITY RELATED INFORMATION (RED/BLACK EQUIPMENTS). Grounding of equipment, conduit, and frames for safety protection in areas processing National Security related information (RED data) is no different than any other facility. Typically a RED and a BLACK signal ground is established by a direct connection totally within a controlled space to an equipotential ground plane and earth electrode subsystem (see Figure 1-65). Cable shields from the RED equipment to the RED side of the crypto are grounded at least at both ends. Cable shields from the BLACK side of the crypto equipment through the BLACK IDF to the BLACK equipment are normally grounded at both ends. For unbalanced signaling, signal ground is usually established by a direct connection from an isolated signal ground bus in the RED distribution frame to an equipotential ground plane and in turn to the earth electrode subsystem (see Figures 1-66, 1-67, and 1-68.) Figure 1-69 provides information on the facility power and ac ground distribution system. BLACK signal ground is used to provide a signal ground reference in the BLACK distribution frame and for signal line filters. For all aspects other than grounding, bonding, and shielding of secure installations, refer to NACSIM 5203. Refer to Section 2.4 of this Volume for the grounding of existing RED/BLACK equipments and systems.

Note: An equipotential ground plane is considered as earth for the signal reference subsystem of communication systems, regardless of elevation from physical earth.

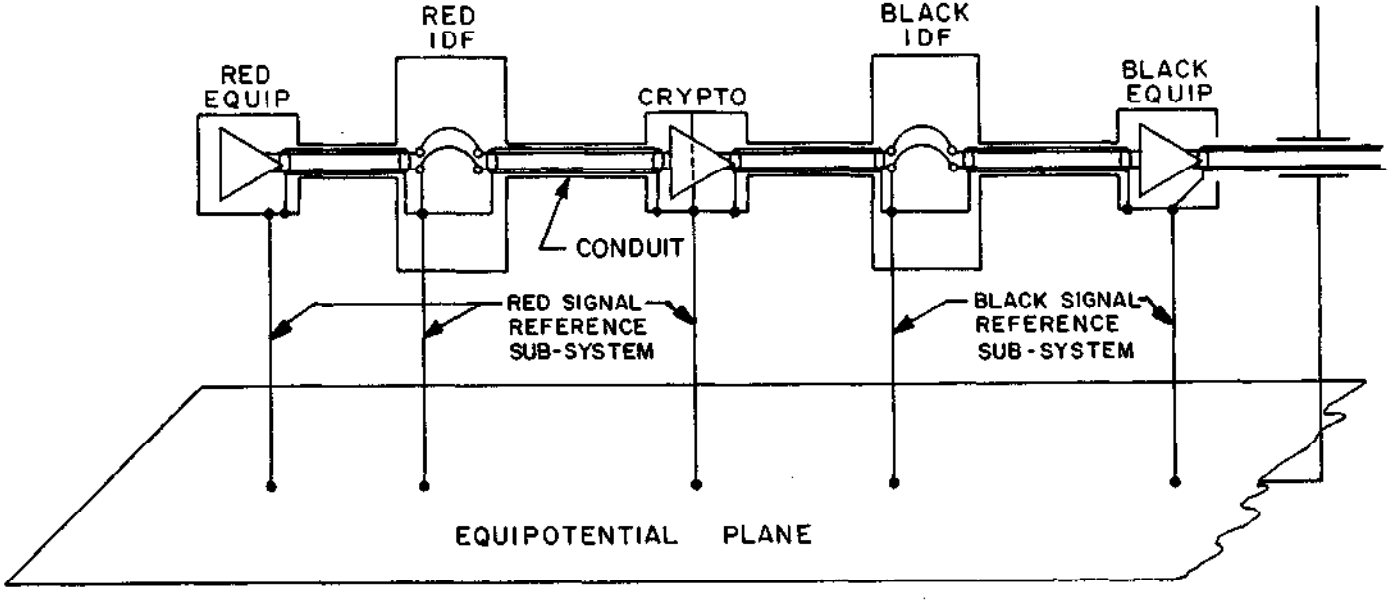

Figure 1-65. Typical RED/BLACK Signal Reference Subsystem (High Level Signals)

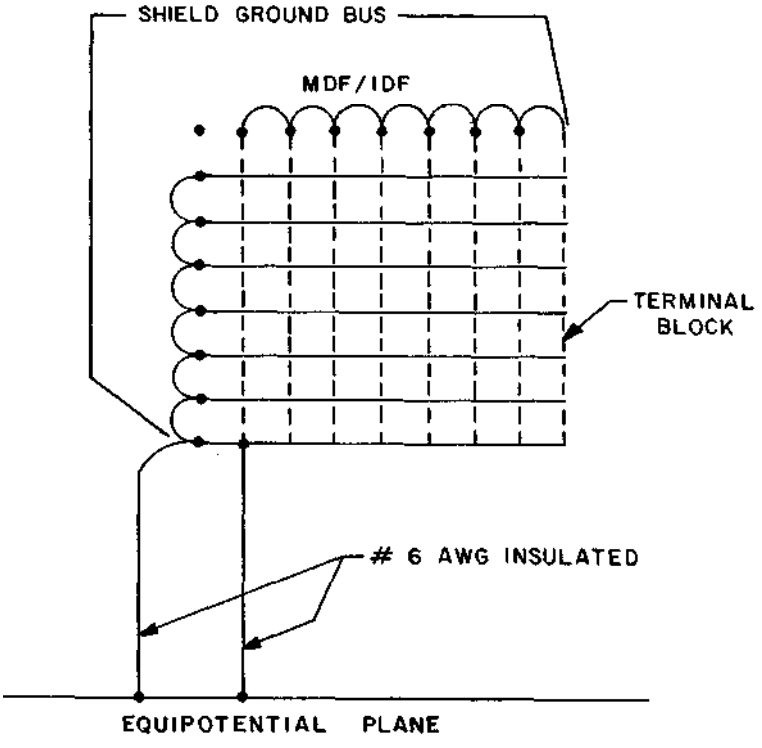

Figure 1-66. Typical Red Signal, Shield Ground, Bus Distribution System

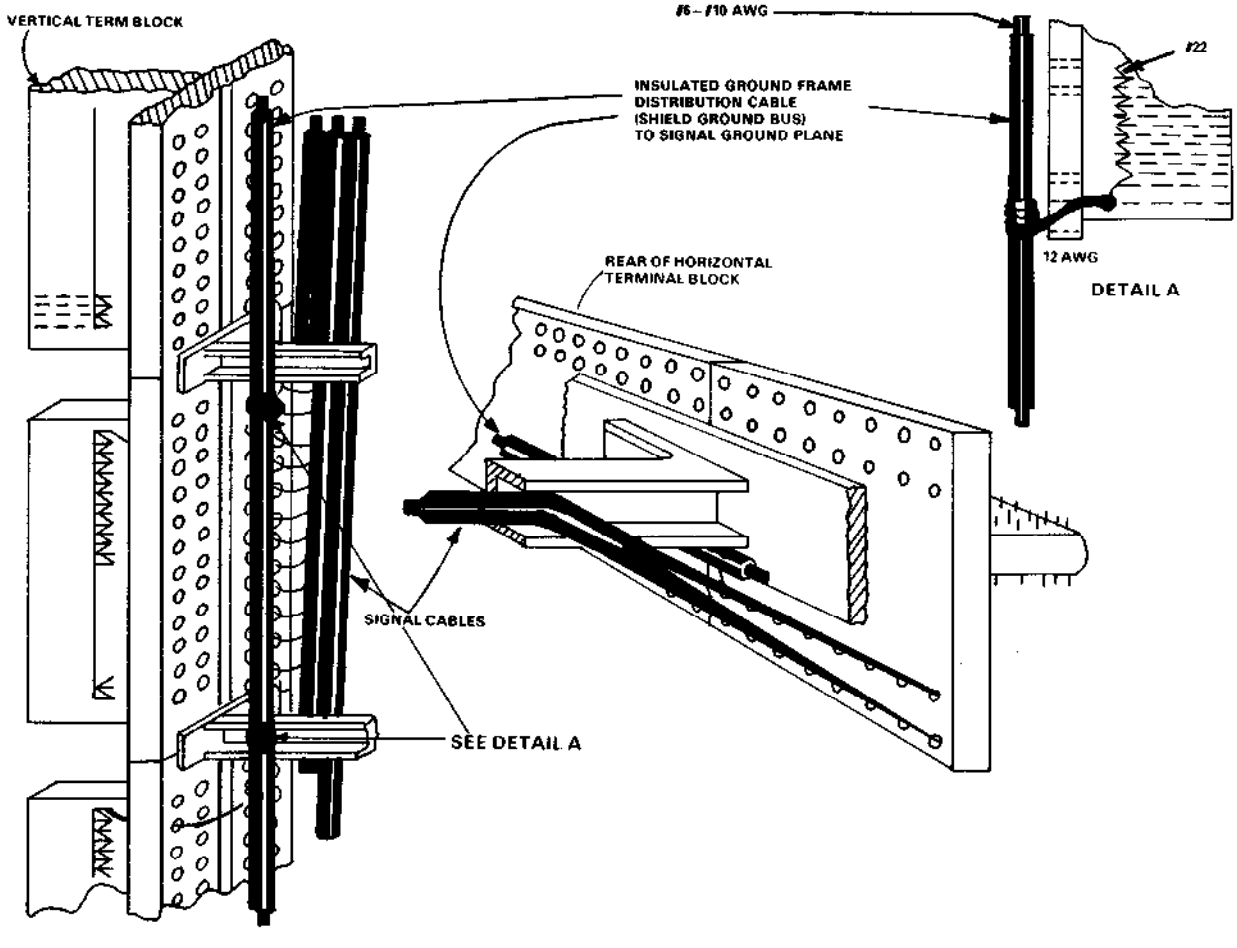

Figure 1-67. Typical Intermediate Distribution Frame (Shield Ground Bus in Distribution Frames)

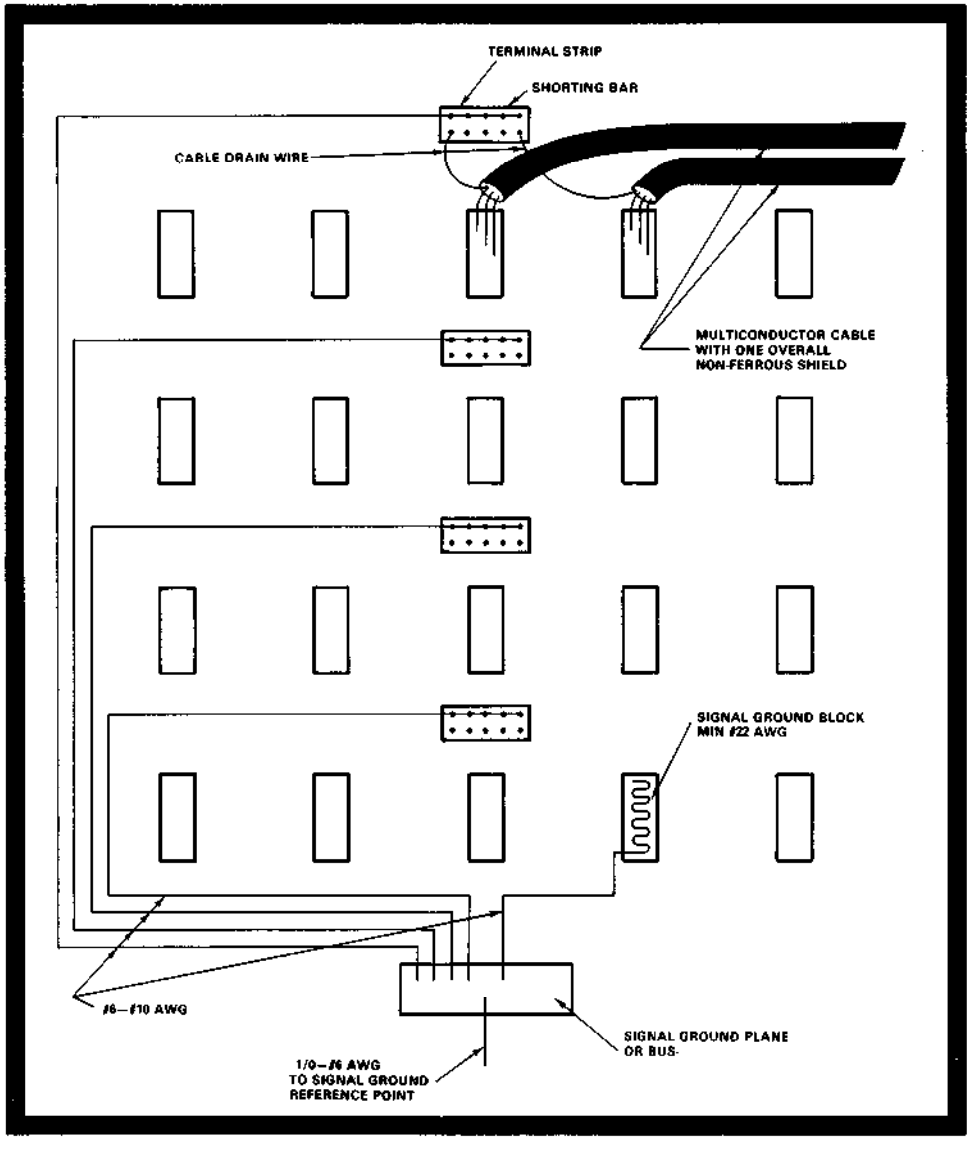

Figure 1-68. Typical Intermediate Distribution Frame (Data Concentrator Frame Installation)

FROM THE FILTER BACK, THE GREEN WIRE CONDUCTOR SHOULD BE THE SAME AWG AS THE NEUTRAL TO PROVIDE A PARALLEL PATH TO GROUND IN EVENT THE NEUTRAL OPENS.

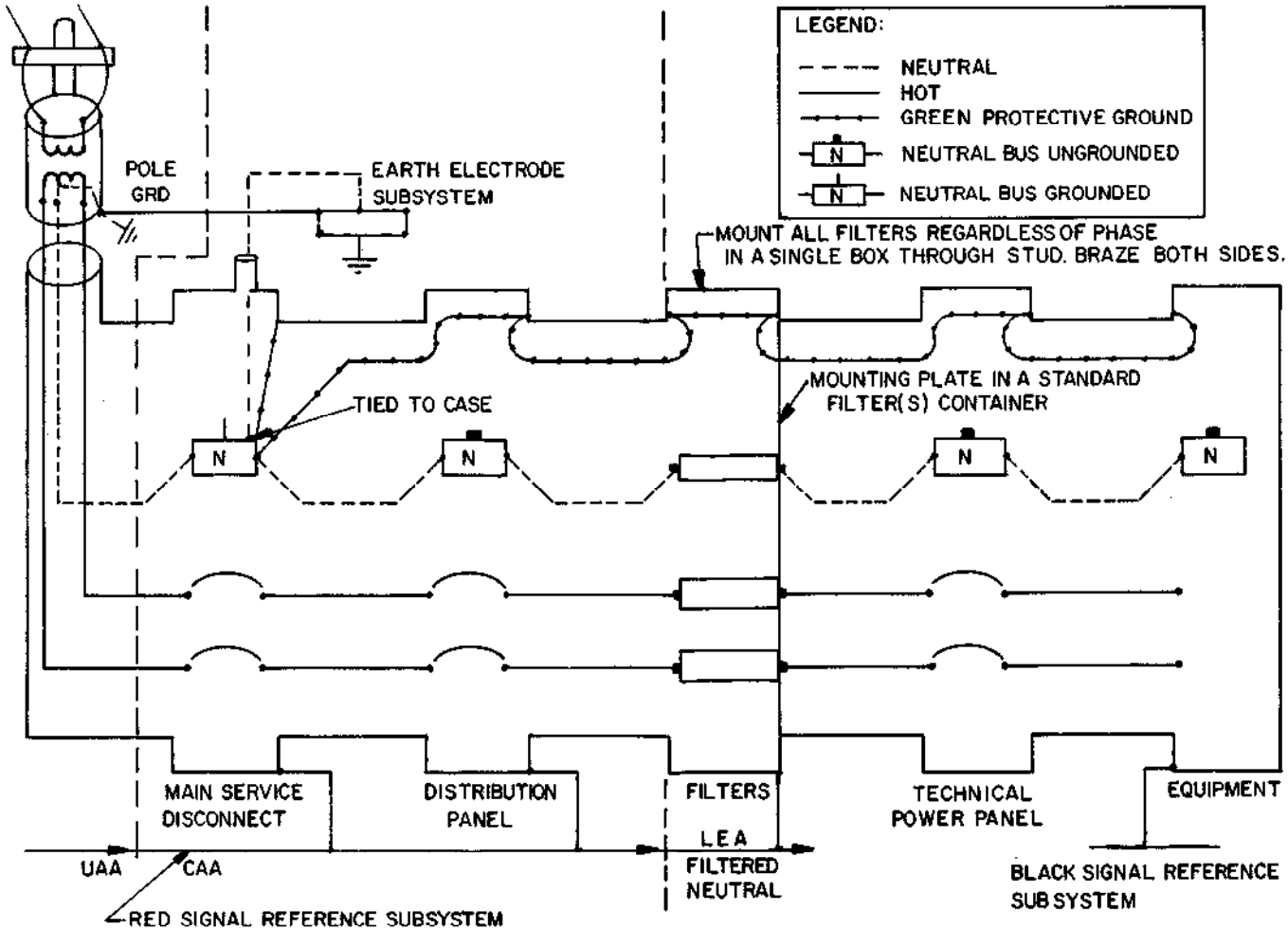

NOTE: WHEN USE OF NEUTRAL FILTER INTRODUCES SYSTEM/EQUIPMENT OPERATIONAL PROGRAMS, THE NEED FOR THE FILTER SHOULD BE VERIFIED BY A TEMPEST TEST.

Figure l-69. Facility Power and AC Ground Distribution

1.7 BONDING PRACTICES. High quality bonds between conducting elements throughout the facility are essential ingredients to the effective functioning of all grounding and shielding networks. It is thus of paramount importance that thorough consideration be given to bonds and bonding throughout design and construction of a facility. A bonding resistance of 1 milliohm indicates a high quality junction has been achieved. See Volume I, Chapter 7, for additional information.

1.7.1 Application Guidelines.

a. Utilize welding (exothermic) whenever possible for permanently joined bonds. The welds must be adequate to support the mechanical load demands on the bonded members, and the following minimum requirements must also be met:

(1) On members whose maximum dimension is 5 cm (2 inches) or less, the weld must extend completely across the side or surface of largest dimensions.

(2) On members whose largest dimension is greater than 5 cm (2 inches) but less than 30 cm (12 inches), one weld of at least 5 cm (2 inches) in length must be provided.

(3) On members whose largest dimension is greater than 30 cm (12 inches), two or more welds, each not less than 5 cm (2 inches) in length, are to be provided at uniform spacings across the surface of largest dimension. The maximum spacing between successive welds must not exceed 30 cm (12 inches).

(4) At butt joints, use complete penetration welds on all members whose thickness is 0.63 cm (l/4 inch) or less. Where the thickness of the members is greater than 0.63 cm (l/4 inch), the depth of the weld must not be less than 0.63 cm (l/4 inch).

(5) Fillet welds are to have an effective size equal to the thickness of the members or as specified by Construction Specification for the Design, Fabrication, and Erection of Structural Steel for Buildings (1-7).

(6) At lap joints between members whose thickness is less than 0.63 cm (l/4-inch), double fillet welds must be provided.

b. Use brazing (or silver soldering) for permanently bonding copper and brass.

c. Do not use soldered connections in the fault protection subsystem, the lightning protection subsystem or the earth electrode subsystem.

d. All structural bolted connections must conform to the torque requirements of Table 1-23.

e. The proper order of assembly for bolted bonds is illustrated in Figure 1-70. Position load distribution washers directly underneath the bolt head or under the nut next to the primary member. Lockwashers may be placed between the nut and any load distribution washers. Toothed lockwashers should not be placed between the primary bonded members but may be used as shown in Figure 1-70 for interior locations that are not exposed to moisture and where electrochemically compatible metals for the washer and bond members are utilized.

Table 1-23

Minimum Torque Requirements for Bolted Bonds

Bolt Size	Threads/Inch	Min. Torque (in -1bs)	Tension (lbs)	Bond Area (in.2)
#8	32	18	625	0.416
	36	20	685	0.456
#10	24	23	705	0.470
	32	32	940	0.626
1/4”	20	80	1840	1.225
	28	100	2200	1.470
5/16”	18	140	2540	1.690
	20	150	2620	1.750
3/8”	16	250	3740	2.430
	24	275	3950	2.640
7/16”	14	400	5110	3.400
	20	425	5120	3.420
1/2”	13	550	6110	4.070
	20	575	6140	4.090
5/8”	11	920	7350	4.900
3/4”	10	1400	9300	6.200
7/8”	9	1950	11100	7.400
1”	8	2580	12900	8.600

f. Once the mating surfaces have been cleaned of all nonconductive material, join the bond members together as soon as possible. If delays beyond two hours are necessary in corrosive environments, the cleaned surfaces must be protected -with an appropriate coating which, of course, must be removed before completing the bond.

g. Alligator clips and other spring loaded clamps are to be employed only as temporary bonds. Use them primarily to insure that personnel are not inadvertently exposed to hazardous voltages when performing repair work on equipment or on facility wiring.

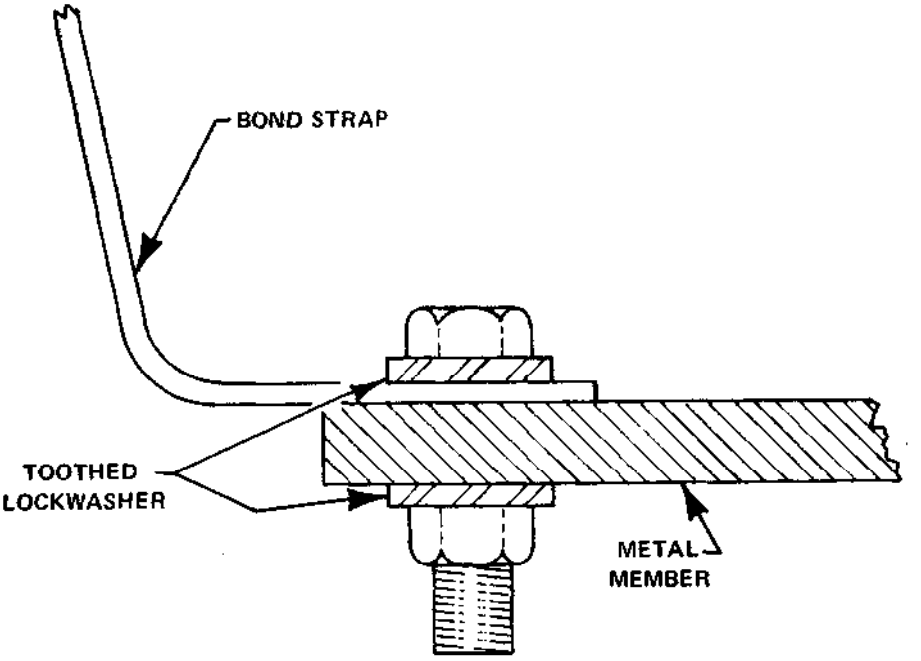

Figure l-70. Order of Assembly for Bolted Connection

1.7.2 Surface Preparation.

a. Welding generally requires only the removal of foreign material which might prevent a homogeneous weld from being established.

b. Before performing exothermic welding, dirt and other debris must be wiped or brushed away from the weld area and water must be dried off before positioning the molds.

c. Surfaces to be brazed or soldered are to be cleaned of all foreign matter and metallic films that would prevent adhesion of the filler metal to the primary members, and appropriate fluxes are to be applied. After the bond has been completed, remove any excess flux or neutralizers to prevent future corrosion.

d. The mating surfaces of bolted and other compression type bonds require careful cleaning in accordance with the discussion in Volume I, Section 7.6. The basic requirements are:

(1) All nonconductive material must be removed. Such materials include paints and other organic finishes; anodize films; oxide and sulfide films; and oil, grease and other petroleum products.

(2) All corrosive agents must be removed. Such agents include water, acids, strong alkalies, and any other materials which provide conductive electrolytic paths.

(3) All solid matter which would interfere with the establishment of a low resistance path across the bond interface or which forms a wedge or barrier to keep the bond area open to the entrance of corrosive materials or agents must be removed. Such solid materials include dust, dirt, sand, metal filings, and corrosion by-products.

1.7.3 Bond Protection Code. For bonds of high reliability, corrosion must be prevented by (1) avoiding the pairing of dissimilar metals and (2) preventing the entrance of moisture or other electrolytes into the bond area.

Metals to be in direct contact should fall as close together in the galvanic series (see Volume I, Section 7.8.1.2) as possible. Compatible groupings of the common metals are given in Table 1-24. The corrosive action between metals of different groups will be greatest when the metallic union is openly exposed to salt spray, rain, or other liquids. The less exposed the bond, the less the rate of corrosion. The relative degrees of exposure may be defined as follows (l-8):

Exposed: Open, unprotected exposure to weather.

Sheltered: Limited protection from direct action of weather. Locations in louvered housings, sheds, and vehicles offer sheltered exposure.

Housed: Located in weatherproof buildings.

When bonds under these different exposure conditions must be made between different groups, they should be protected as indicated by Table 1-25. Condition A means that the couple must have a protective finish applied after metal-to-metal contact has been established so that no liquid film can bridge the two elements of the couple. Condition B means that the two metals may be joined with bare metal exposed at junction surfaces. The remainder of the bond must be given an appropriate protective finish. Condition C indicates that the combination cannot be used except under very unusual circumstances where short life expectancy can be tolerated or when the equipment is normally stored and exposed for only short intervals. Protective coatings for bonds subjected to weather exposure, corrosive fumes, or excessive dust are mandatory. Consult Table 1-26 for assistance in choosing a method for protecting the bond members against corrosion.

Table 1-24

Compatible Groups of Common Metals

Group	Metals
I	Magnesium
II	Aluminum, aluminum alloys, zinc, cadmium
III	Carbon steel, iron, lead, tin, lead-tin solder
IV	Nickel, chromium, stainless steel
V	Copper, silver, gold, platinum, titanium

Table 1-25

Bond Protection Requirements

Condition of Exposure	Anode I	Anode II	Anode III	Anode IV	Cathode
Exposed	A	A			
Sheltered	A	A			II
Housed	A	A			
Exposed	C	A	B		
Sheltered	A	B	B		III
Housed	A	B	B		
Exposed	C	A	B	B	
Sheltered	A	A	B	B	IV
Housed	A	B	B	B	
Exposed	C	C	C	A	
Sheltered	A	A	A	B	V
Housed	A	A	B	B	

Table 1-26

Protective Finishes for Bond Members

Type Bond	Finishing Requirements
1. Between Similar Metals	
a. Clad and corrosion resistant aluminum (6061)	Clean and deoxidize
b. Non-corrosion resistant aluminum	Chemically treat per MIL-C-5541 (1-9) using colored inspectable coating on both members of joint (Alodine 600, Iridite 14).
c. Steel (alloy and carbon)	If entire part is finished, plate with tin, MIL-T-10727 (1-10), Type I or II. If only faying surface is finished, plate with tin using brush plating method.
d. Corrosion-resistance steel (18-8 stainless steel)	Clean per TT-C-490 (1-11) Method1 (abrasive) or Method VI (phosphoric acid etch) for machined surfaces.
e. Copper and copper alloys	If entire part is finished, plate with tin, MIL-T-10727, Type I or II. If only faying surface is finished, plate with tin using brush plating method.
2. Dissimilar Metals	
a. Corrosion resistant aluminum mated with the following metals:	Clean and deoxidize
(1) Non-corrosion resistant aluminums	Chemically treat per MIL-C-5541, colored inspectable coating (Alodine 600, Iridite 14).
(2) Steel (alloy and carbon)	If entire part is finished, plate with tin, MIL-T-10727, Type I or II. If only faying surface is finished, plate with tin using brush plating method.
(3) Copper and copper alloys	If entire part is finished, plate with tin, MIL-T-10727, Type I or II. If only faying surface is finished, plate with tin using brush plating method.

Table 1-26 (Continued)

Protective Finishes for Bond Members

Type Bond	Finishing Requirements
(4) Corrosion-resistant	Clean per TT-C-490, Method I (abrasive) or Method VI (phosphoric acid etch).
b. Non-corrosion resistant aluminum mated with the following metals:	Chemically treat per MIL-C-5541, colored inspectable coating (Alodine 600, Iridite 14).
(1) Steel (alloy and carbon)	If entire part is finished, plate with tin, MIL-T-10727, Type I or II. If only faying surface is finished, plate with tin using brush plating method.
(2) Copper and copper alloy	If entire part is finished, plate with tin, MIL-T-10727, Type I or II. If only faying surface is finished, plate with tin using brush plating method.
(3) Corrosion resistant steel	Clean per TT-C-490, Method I (abrasive) or Method VI (Phosphoric acid etch).
c. Steel (alloy and carbon) mated with the following metals:	If entire part is finished, plate with tin, MIL-T-10727, Type I or II. If only faying surface is finished, plate with tin using brush plating method.
(1) Copper and copper alloys	If entire part is finished, plate with tin, MIL-T-10727, Type I or II. If only faying surface is finished, plate with tin using brush plating method.
(2) Corrosion resistant steel	Clean per TT-C-490, Method I (abrasive) or Method VI (phosphoric acid etch).
d. Copper and copper alloys	If entire part is finished, plate with tin, MIL-T-10727, Type I or II. If only faying surface is finished, plate with tin using brush plating method.
(1) Corrosion resistant steel	Clean per TT-C-490, Method I (abrasive) or Method VI (phosphoric acid etch).

1.7.3.1 Jumper Fasteners. Acceptable fastener materials for bonding aluminum and copper jumpers to structures are indicated in Table 1-27. The arrangement of the metals is in the order of decreasing galvanic activity. The screws, nuts, and washers to be used in making the connections as indicated are:

Type I - Cadmium or zinc plated steel, or aluminum
Type II - Passivated stainless steel

Where either type of securing hardware is indicated, Type II is preferred from a corrosion standpoint.

Table 1-27

Metal Connections for Aluminum and Copper Jumpers

Metal Structure (Outer Finish Metal)	Connection For Aluminum Jumper	Screw Type	Connection For Tinned Copper Jumper	Screw Type
Magnesium and Magnesium alloys	Direct or Magnesium washer	Type I	Aluminum or Magnesium washer	Type I
Zinc, Cadmium, Aluminum and Aluminum alloys	Direct	Type I	Aluminum washer	Type I
Steel (except stainless steel)	Direct	Type I	Direct	Type I
Tin, Lead, and Tin-lead solders	Direct	Type I	Direct	Type I or II
Copper and Copper alloys	Tinned or Cadmium plated washer	Type I or II	Direct	Type I or II
Nickel and Nickel alloys	Tinned or Cadmium plated washer	Type I or II	Direct	Type I or II
Stainless Steel	Tinned or Cadmium plated washer	Type I or II	Direct	Type I or II
Silver, Gold and precious metals	Tinned or Cadmium plated washer	Type I or II	Direct	Type I or II

1.7.4 Typical Bonds.

1.7.4.1 Cable Trays. Utilize cable trays as part of the overall system bonding scheme. Bond each section of each tray in the manner shown in Figure 1-71 to the following section to provide a continuous path. The trays should also be connected to equipment housings by wide, flexible, solid bond straps as illustrated in Figure 1-72.

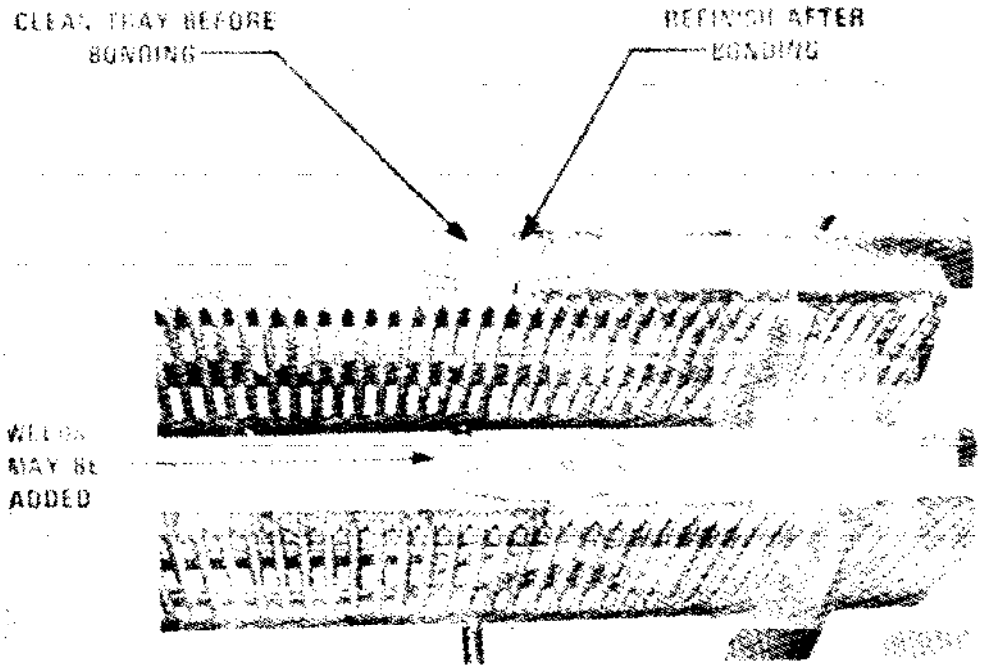

Figure 1-71. Bonding of Cable Trays

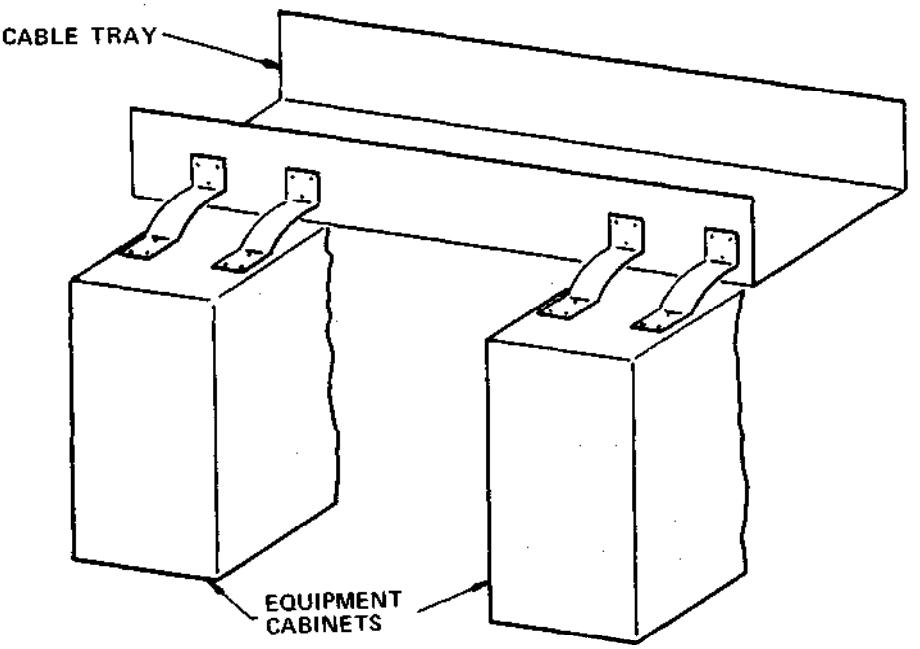

Figure 1-72. Bonding of Equipment Cabinets to Cable Tray

1.7.4.2 Tubing and Conduit. Long spans of conduit should be properly bonded to the structure at both ends and at several intermediate points. Ordinary clamps cannot be used to bond flexible conduit since the required pressure on a comparatively small surface area may be sufficiently high to compress or collapse the conduit. Instead of ordinary clamps, use a flared, split sleeve (Figure 1-73) fitted around the flexible conduit. This sleeve distributes the high pressure of the bonding clamp over a large area, thereby exerting low pressure on the conduit. Figure 1-74 illustrates a method for bonding to rigid conduit. With either type of clamp, the conduit or tubing should be cleansed of paint and foreign material over the entire surface covered by the clamps. All insulating finishes should be removed from the contact area before assembly, and anodized screws, nuts, and washers should not be used to attach contacting parts.

1.7.4.3 Other Examples. Figures 1-75 through 1-80 illustrate recommended bonding methods appropriate for most facilities.

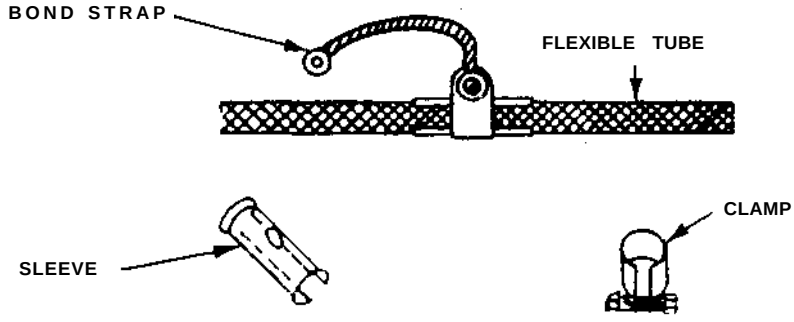

Figure 1-73. Bonding to Flexible Cable and Conduit

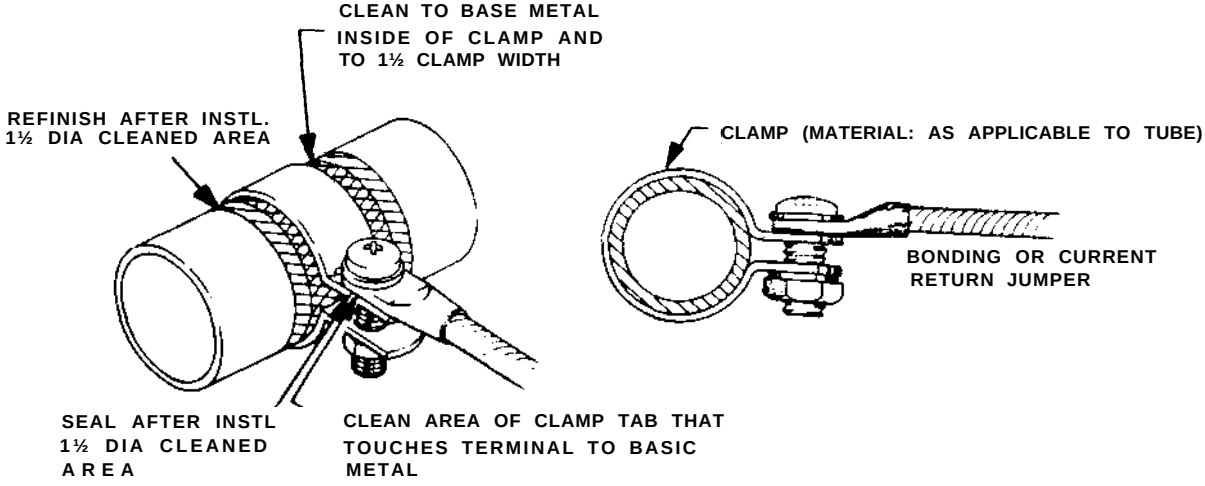

Figure 1-74. Bonding to Rigid Conduit

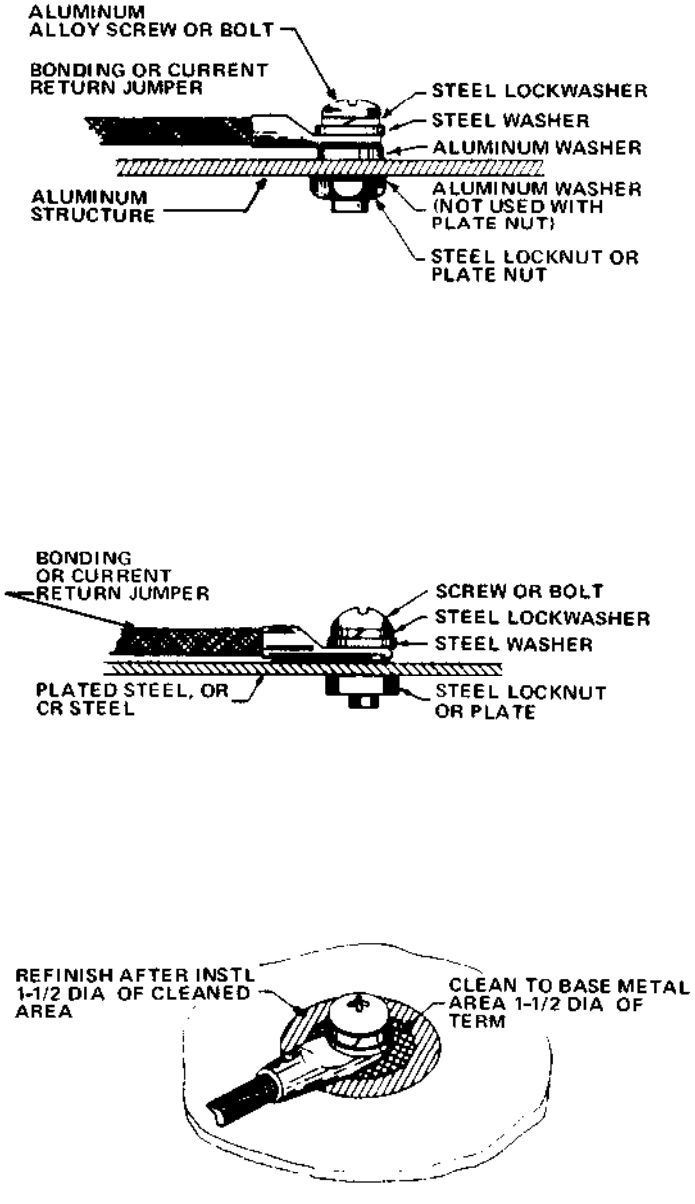

Figure 1-75. Connection of Bonding Jumpers to Flat Surface

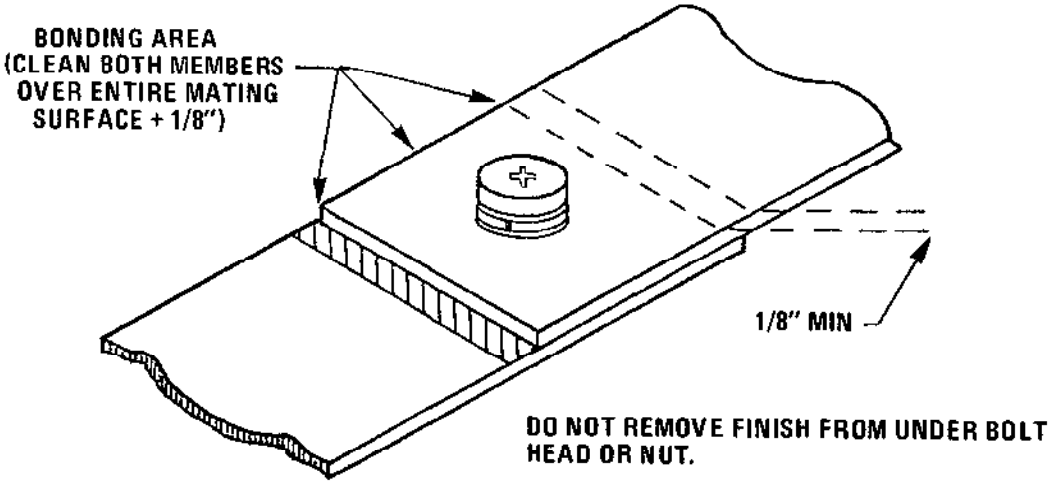

Figure l-76. Bolted Bond Between Flat Bars

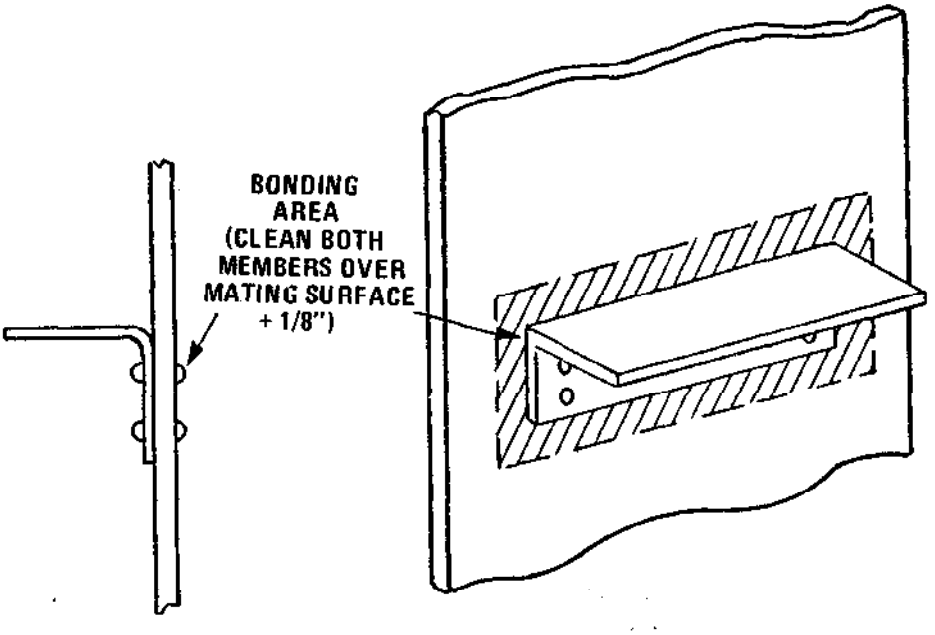

Figure 1-77. Bracket Installation (Rivet or Weld)

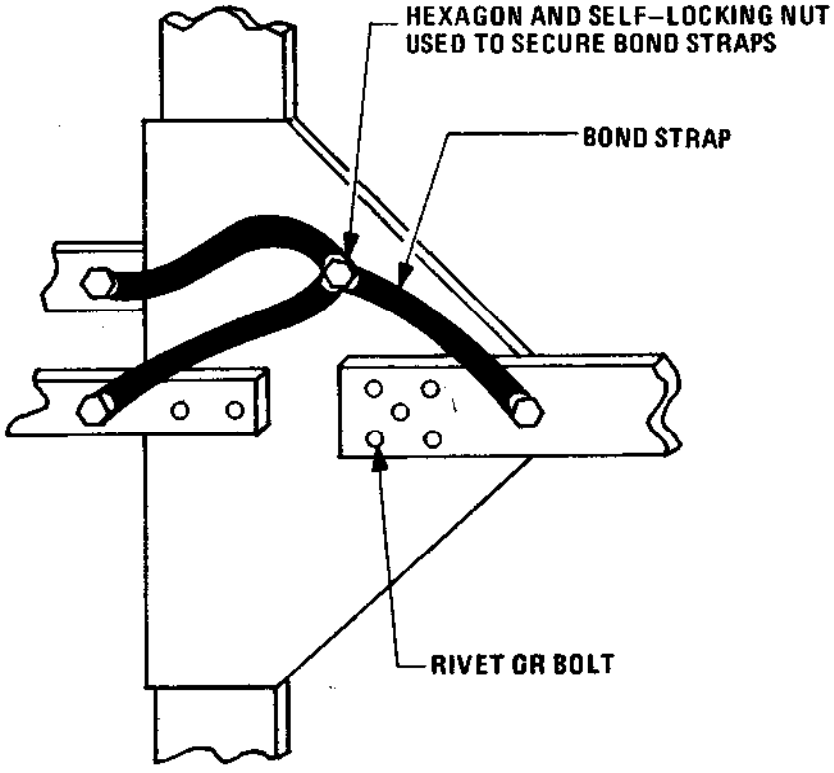

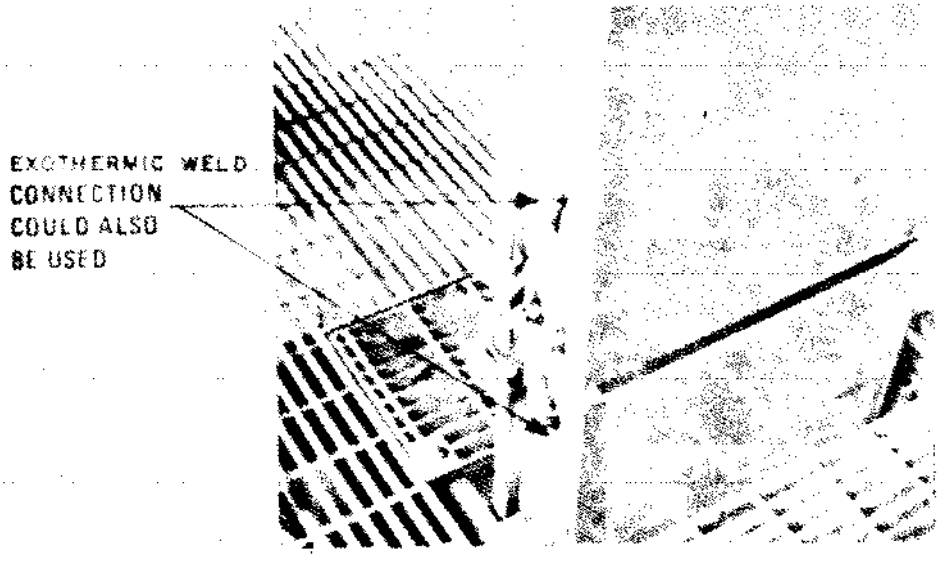

Figure 1-78. Use of Bonding Straps for Structural Steel Interconnections

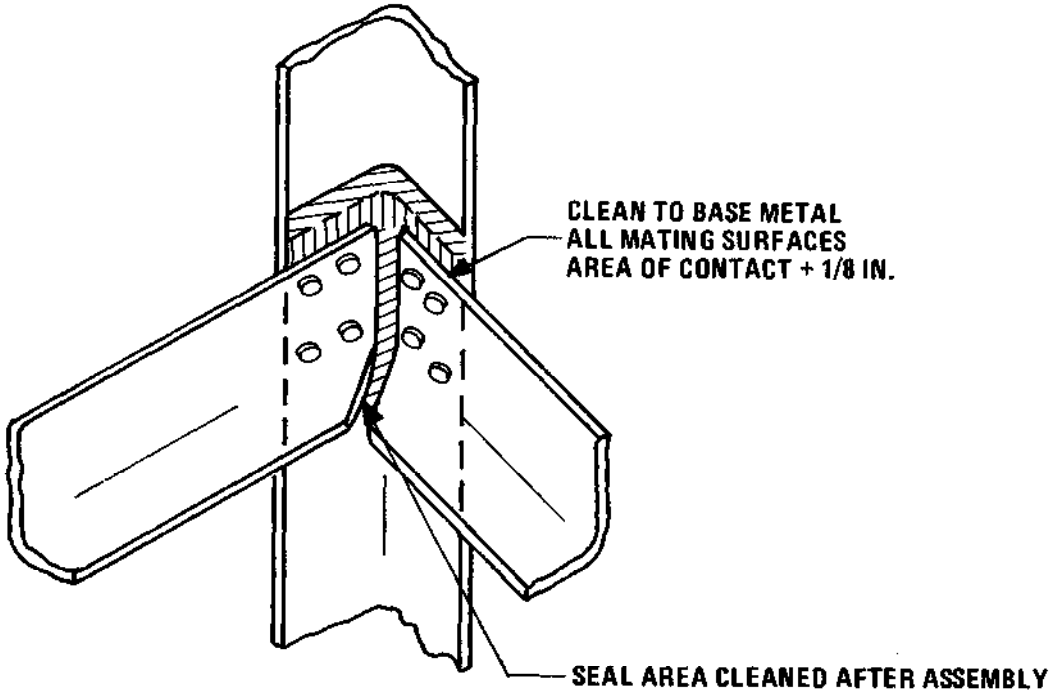

Figure l-79. Direct Bonding of Structural Elements

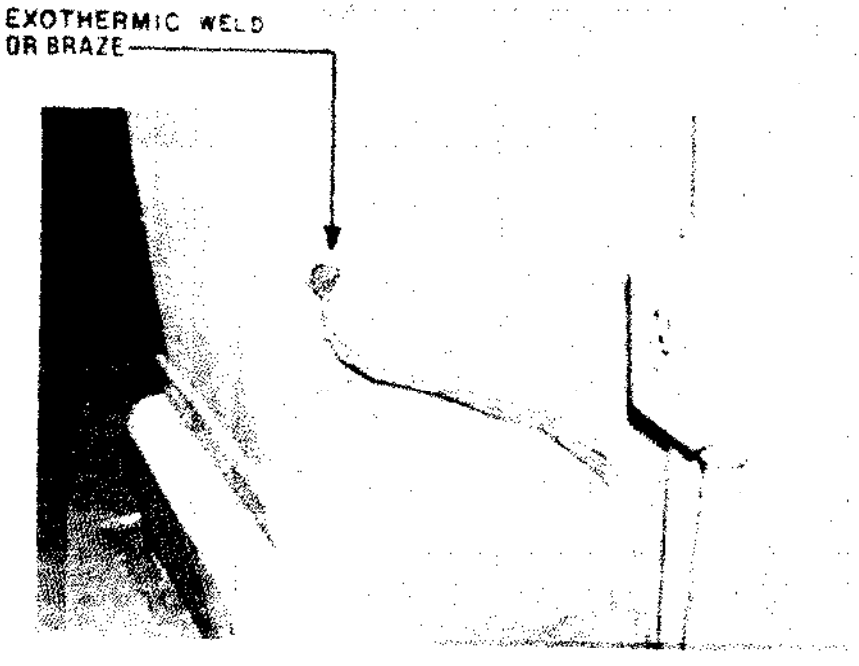

Figure 1-80. Connection of Earth Electrode Riser to Structural Column

1.8 SHIELDING. The shielding provided in a given facility should be adequate to provide the needed equipment and personnel protection; however, it need not go beyond what is required for that particular facility. To determine the shielding required at a facility, the electromagnetic environment at the planned location should first be surveyed; then this threat environment should be compared with the response properties or susceptibilities of the equipment to be located in that environment. If a need for shielding is indicated, then it should be provided either as a part of the facility or the equipment shielding should be upgraded. The final decision will be based on a trade off between the known (or estimated) shielding requirements and the relative cost to provide this shielding. Conducted as well as radiated susceptibility and emission requirements of C-E equipments should meet the specifications of MIL-STD-461.

1.8.1 Establishing Requirements.

a. Tailor the shielding of the facility according to the needs of the equipments or systems to be located there by:

(1) Conducting an electromagnetic survey at the facility location (see Volume I, Section 8.12.2) (The performance of these surveys requires specialized instrumentation, careful equipment calibration procedures, and calibrated antennas. Have this survey performed by an experienced team.),

(2) examining the history of performance of the similar equipments at other sites with comparable electromagnetic environments, and

(3) considering the measured EMI characteristics of the equipments (if available).

b. If measured susceptibility data (the incident field levels which cause equipment interference) are available, determine the amount of additional shielding necessary by subtracting the equipment susceptibility level (in dB above a microvolt per meter, dB μ V/m) from the field strength (as measured in dB μ V/m) of the incident signals. If the measured signal strength is greater than the susceptible level, arrange to provide the extra shielding necessary either as part of the structure or building or require that the equipment's shielding be upgraded (see Section 3.4). If susceptibility data is not available, make a best estimate of the amount of required shielding from the historical performance of the equipments (or similar types) at other sites.

c. Before deciding what type or how much supplemental shielding material is necessary, estimate the amount of shielding inherently provided by conventional building materials and techniques. For example:

(1) Use Figures 1-81 and 1-82 to estimate the shielding provided by normal construction techniques (steel skeleton with brick or concrete block exterior with standard wood, gypsum board, or concrete, block interior walls).

(2) Reinforced concrete offers additional shielding because of the presence of the rebar. Estimate the shielding effectiveness of single course rebar to low frequency magnetic fields from the curves shown in Figure 1-83. (Use Table 1-28 to obtain attenuation correction factors to apply to Figure 1-83 for other size rebar and other spacings.)

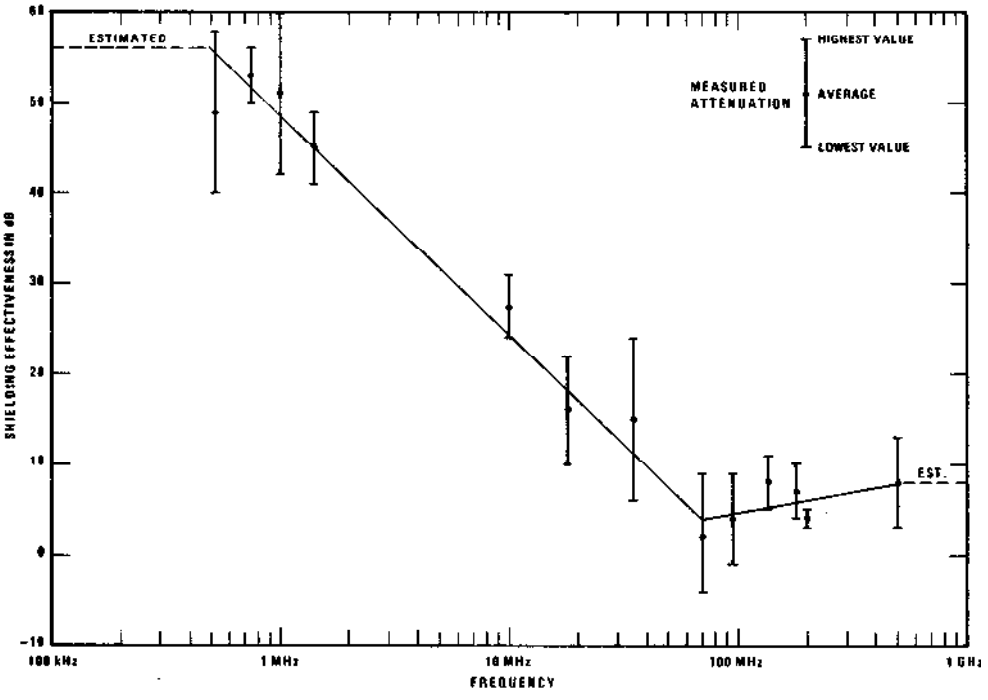

Figure 1-81. Measured Electromagnetic Shielding Effectiveness of a Typical Building at 6 Feet Inside Outer Wall (1-12)

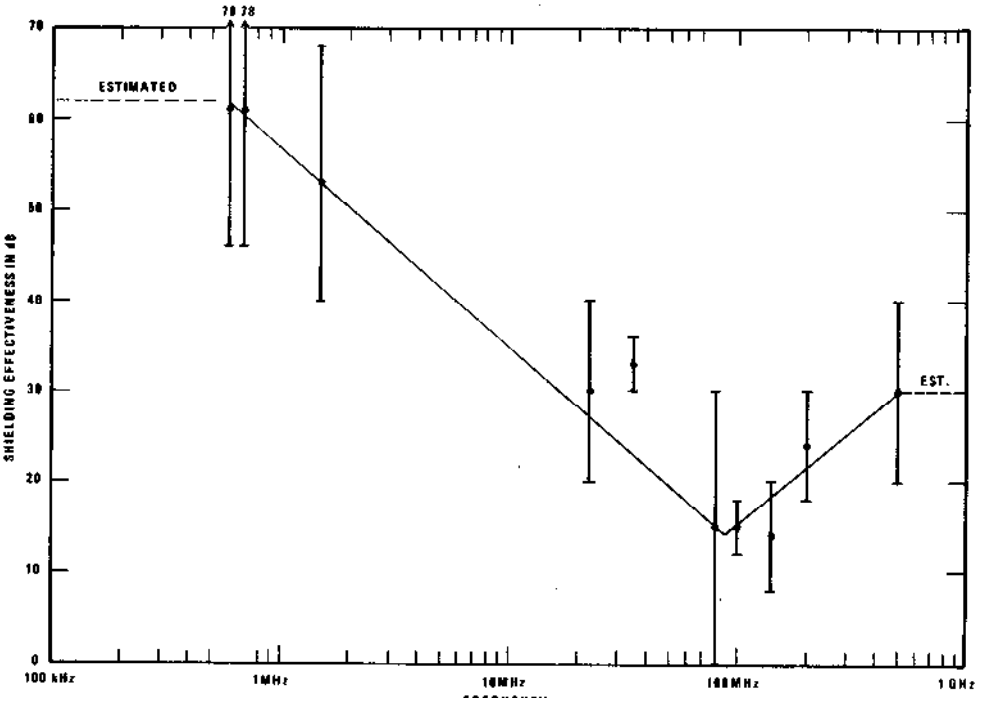

Figure 1-82. Measured Electromagnetic Shielding Effectiveness of a Typical Building at 45 Feet Inside Outer Wall (1-12)

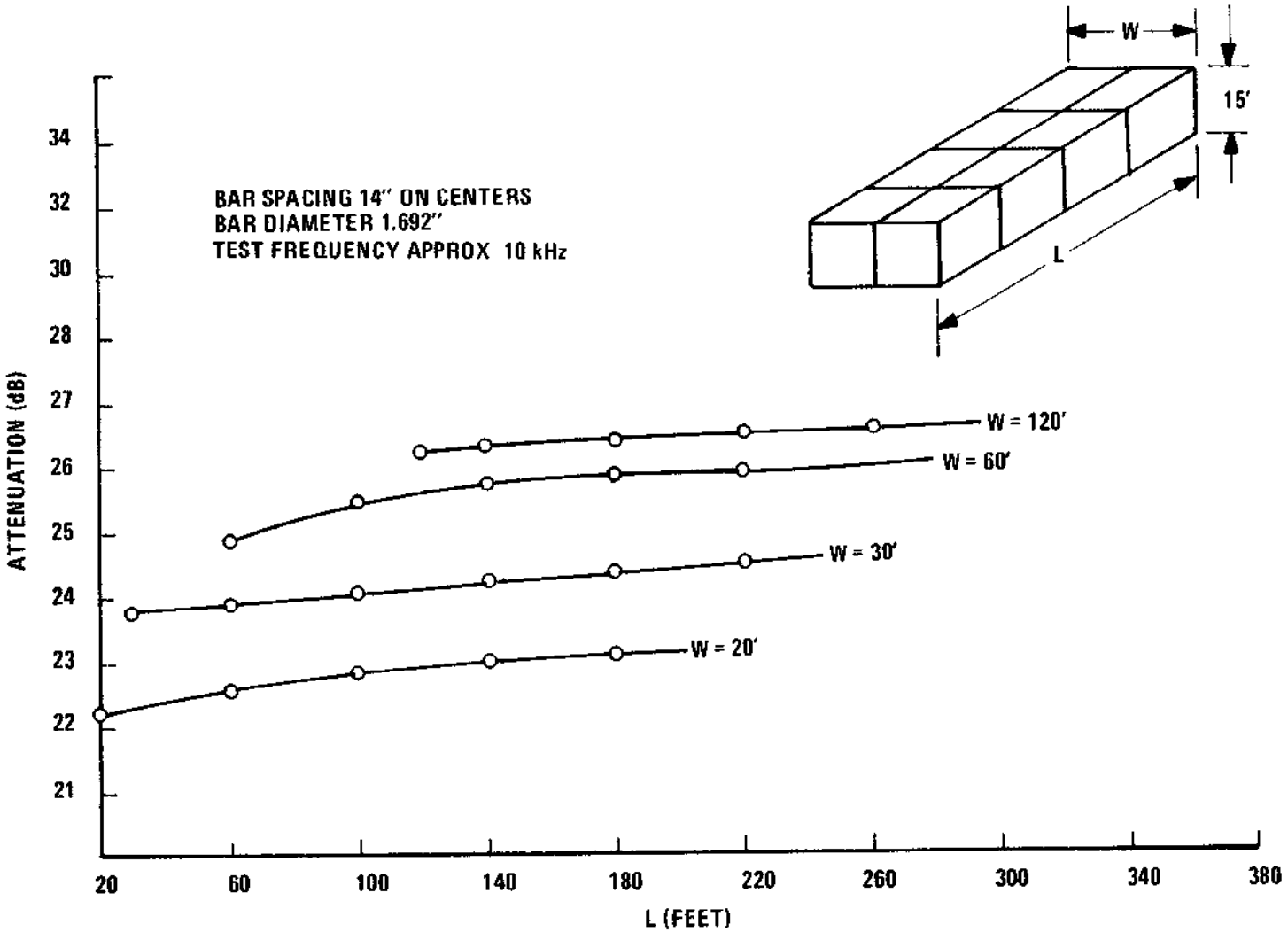

Figure 1-83. Shielding Effectiveness of Rebars (1-13)

Table 1-28

Attenuation Correction Factors for Reinforcing Steel (1-14)

Bar Diameter (in.)	Bar Spacing (in.)	No. of Courses	Correction Factor (dB)
2.257	12	Single	+5
1.692	14	Single	0
1.000	18	Single	-6
2.257	20	Double	+8.5
1.692	14	Double	+13
1.000	16	Double	+5

(3) Use Figure 1-84 to determine the relative attenuation of rebar (and other wire mesh or grid) to higher frequency electric fields and plane waves. To use this figure, first calculate the ratio of the wire (or bar) diameter, d, to the wire spacing, S. Then determine the ratio of S to the wavelength, λ, at the frequency, f, of interest (λ in meters = 3 x 10^8 divided by f in hertz). For example, determine the shielding effectiveness at 100 MHz of a 1" x 2" grid made of No. 10 AWG (0.1" diameter) wire.

Calculation Steps

(a) $\lambda = \frac{3 \times 10^8}{1 \times 10^8} = 3 \text{ m} = 118 \text{ in.}$

(b) for $S = 1$, $\frac{S}{\lambda} = \frac{1}{118} = 0.0085$ and

for $S = 2$, $\frac{S}{\lambda} = \frac{2}{118} = 0.017$

depending upon the polarization of the incident wave.

(c) for $S = 1$, $\frac{d}{S} = \frac{0.1}{1} = 0.1$ and

for $S = 2$, $\frac{d}{S} = \frac{0.1}{2} = 0.05$

(d) The Shielding Effectiveness (SE) (depending upon the polarization of the field) from Figure l-84 is either

$$SE_{S=1} = 35dB$$

or

$$SE_{S=2} = 25\ dB.$$

(e) Use the lowest SE (25 dB) for design purposes.

d. If these calculations or estimates indicate a need for additional shielding, incorporate the shielding into the design of the structure, and schedule its installation at a time in the construction phase when it can be done most economically.

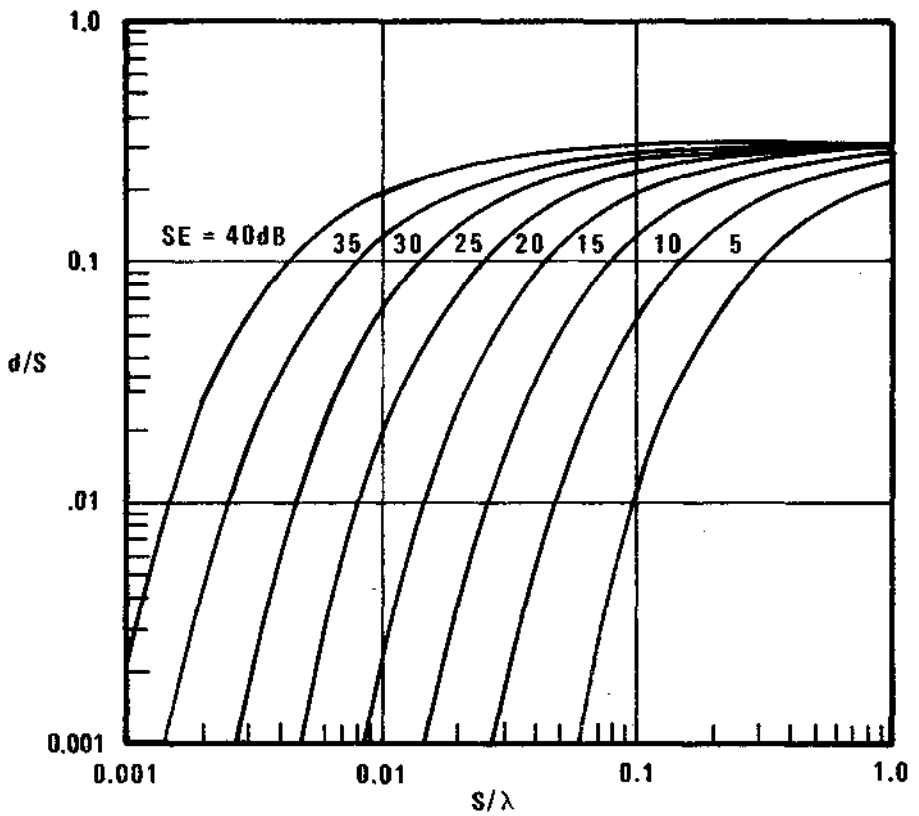

Figure 1-84. Shielding Effectiveness of a Grid as a Function of Wire Diameter, Wire Spacing, and Wavelength (1-15)

1.8.2 Design Guidelines.

a. Design the shielding to conform to the needs of the system. Consider the relative ease of shielding an individual equipment rather than shielding a room or the entire structure.

b. Assure that the shielding provided is sufficient to meet system needs (both known and predicted) but do not excessively over design.

c. Use the inherent shielding properties of the structure to maximum advantage. Employ the small amount of shielding (typically 10-20 dB) offered by reinforced concrete. However, do not expect common building materials such as brick, concrete, wood, fiberglass, or plastic to provide any significant shielding to electromagnetic signals (1-16).

d. Locate most sensitive and most critical equipments as close to the core of the structure as operational requirements will permit.

e. To minimize the attenuation requirements on shields, predetermine the location of likely sources of interference such as power substations, engine-generators, and RF transmitters; maximize the separation between such sources and potentially susceptible equipments or systems.

f. Where a choice exists as to exterior skin materials for the shelter or structure (e.g., fiberglass versus sheet steel or aluminum) choose metals to take advantage of their improved shielding properties. (In order to utilize metal sidings as effective shields, seams must be electrically continuous.)

g. Insure that shield continuity is maintained at points of entry of signal cables, power conductors, utility lines, and ground conductors.

h. Make sure that windows, doors, and ventilation ports are shielded along with the walls. Use well bonded screen wire for windows, use metal doors, and apply honeycomb ducts or appropriate screening over ventilation ports.

i. Equip all power lines supplying shielded areas with power line filters.

j. Use steel conduit in preference to aluminum conduit to take advantage of the improved magnetic shielding properties of steel.

k. Use enclosed metal wiring ducts or raceways in preference to open mesh or unenclosed types.

l. If the only purpose of the shield is to establish a personnel barrier to prevent inadvertent contact with dc and power frequency hazardous voltages, consider the use of nonconductive shields which may be less expensive. (If metal shields are used to provide shock protection, they must be well grounded to the power safety ground - the green wire network.)

1.8.3 Selection of Materials. The selection of a shielding material can be done either by (1) choosing a possible metal of a given thickness and then determining if the shielding effectiveness is equal to or greater than the field attenuation desired, or (2) starting with desired attenuation, determining what thickness of metal sheet or what type of screen is required. Either approach is acceptable.

a. As the first step in the selection of a shield type and material, ascertain the nature of the field by determining whether it is an electric field, magnetic field, or a plane wave. (The distance between the source and the shield relative to signal wavelength gives an indication of the impedance characteristics of the incident field. Note the source may be either the actual signal generator such as a transmitter or it may be the current-carrying conductor such as a power line or signal cable.)

(1) First compute the wavelength, λ, or the incident signal or signals from

$$\lambda = \frac{3 \times 10^{8}}{f}$$

For f in hertz, λ will be in meters.

(2) If source location is known, measure or estimate r. Then calculate $\frac{2\pi r}{\lambda}$.

Value of r must be greater than $\frac{2D^2}{\lambda}$.

r is distance from source in meters
D is length of antenna in meters

(3) If $2\pi r/\lambda$ is less than unity, the incident field will either be a high impedance electric field or it will be a low impedance magnetic field. To determine which one, try to establish what type of source produced the field. (An electric field source is characterized by a high source impedance and relatively low currents. Examples are high voltage dc power supplies; static discharges; short monopole antennas; etc. A magnetic field source is generally characterized as a low impedance, high current source. Typical magnetic sources are loop antennas and power lines.)

(4) If $2\pi r/\lambda$ is unity or greater, assume the incident field is a plane wave.

b. Next, use Figure 1-85 to obtain the absorption loss of the material selected for a plane wave. To use this nomograph, draw a straight line between a point on the right hand vertical scale that corresponds to the particular metal involved and the correct point on the thickness scale (center scale on the nomograph). Mark where the straight line crosses the unlabeled pivot line. Next place a straight edge between the marked point on the pivot line and the frequency of interest (left most vertical scale). Read the absorption loss off the compressed scale just to the left of the thickness scale. (The determination of the absorption loss of a 14 mil sheet of stainlesssteel at 1 kHz is illustrated on the figure. First, line 1 is drawn between stainless steel on the right hand scale and 14 mils on the thickness scale. Then line 2 is drawn between 1 kHz on the left hand scale and the crossover point. The indicated absorption loss is 3 dB.)

If the specific metal of interest is not indicated on the right hand scale, obtain both the relative conductivity, g_r,, and the relative permeability, μ_r, from Table 1-29. Multiply g_r times μ ; use the product as the right hand location for line 1 and complete the determination. (Given the frequency and the desired absorption loss, this nomograph can be used to determine the thickness and/or the type of metal needed.)

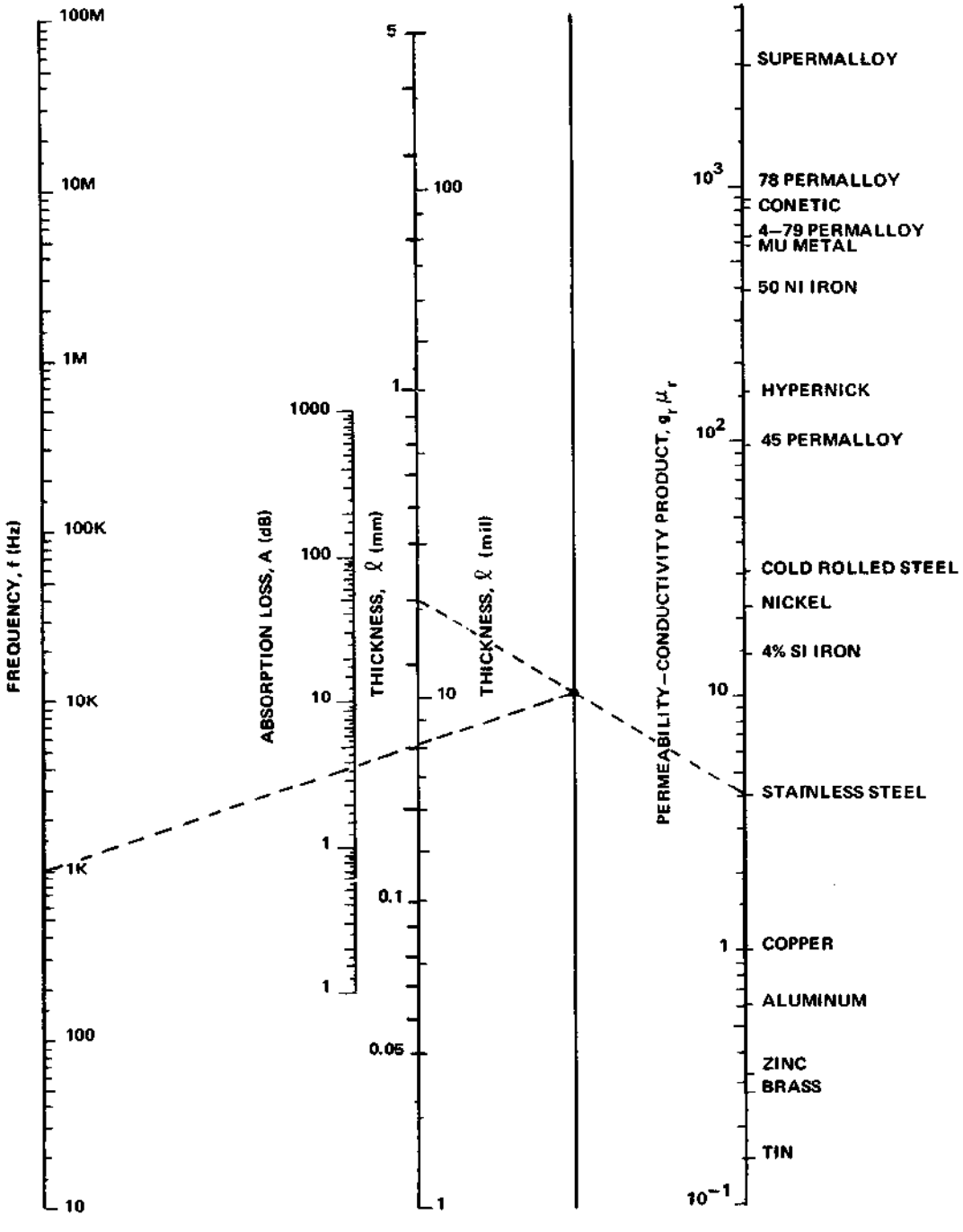

Figure 1-85. Shield Absorption Loss Nomograph (1-17)

c. The total shielding effectiveness is the sum of the absorption loss and the reflection loss. Use Figure 1-86 to determine the reflection loss of various metals to magnetic fields; use the nomograph of Figure 1-87 to determine the reflection loss of electric fields. The procedures for using these nomographs are similar to that described previously for determining absorption loss. Note that the right hand scale is based on the ratio of relative conductivity to relative permeability instead of the product of the two as used on the absorption loss nomograph.

Determine the reflection loss for plane waves with the use of Figure 1-88. Simply lay a straightedge between the metal of interest (or the correct g_r/μ_r ratio) on the right hand scale and the frequency of interest on the left hand scale; read the reflection loss of the scale in between.

Thin shields with low values of absorption loss can experience re-reflections which may cause the estimates of shielding effectiveness to be in error. If the absorption loss is less than 10 dB, see Volume I, Section 8.3.3 for ways to account for the effect of re-reflections.

d. Consider the use of thin metal foils for shielding high frequency (broadcast frequencies and above) plane and electric fields. Use Figures 1-89 and 1-90 to estimate the amount of shielding that can be achieved with copper and aluminum.

1.8.4 Construction Guidelines.

a. Securely ground all metal shields.

b. All seams and joints must be well bonded. Welded seams are highly desirable in enclosures which must provide a high degree (≥ 80 dB) of RF shielding or are intended for EMP protection. Where welding is impractical, solder or knitted wire gaskets should be used to supplement the mechanical fasteners (see Volume I, Section 8.5.2). Figures 1-91 and 1-92 show two recommended techniques for constructing seams in shields.

c. Limit openings (windows, doors, ventilation ports) and penetrations (signal lines, power lines, utilities) to the lowest possible number and restrict their dimensions to a minimum.

(1) If holes through the shield are necessary, see Volume I, Section 8.4.3 to determine the optimum size and spacing.

(2) Use honeycomb (see Volume I, Section 8.5.3.1) for the shielding of ventilation ports wherever possible. Where forced ventilation is used through ports shielded with either honeycomb or wire mesh, predict the pressure drop with the aid of Figure 1-93. (A larger blower will generally be necessary to provide the same volume of air through a shielded port than would be required through an unshielded port.)

d. Peripherally bond metallic utility lines to the shield at the point of entrance. Nonmetallic lines entering through waveguide-below-cutoff (see Volume I, Section 8.5.3.1) ducts or tubes may also be used for water, gas, compressed air, etc.

Table 1-29

Relative Conductivity and Relative Permeability of Common Metals

Metal	Relative Conductivity (g_r)	Relative Permeability (μ_r) Initial	Relative Permeability (μ_r) Maximum	Comments
Alfenol	.011	3,450	116,000	
Beryllium	.377	1		
Brass	.442	1		66% Cu, 34% Zn
Cadmium	.230	1		
Chromax	.017			15% Cr, 35% Ni, 50% Fe
Chromium	.663	1		
Cobalt	.177	70	250	
Constantan	.039			55% Cu, 45% Ni
Copper	1.000	1		Commercial annealed
Gold	.707	1		
HyMu80	.030	20,000	100,000	80% Ni, 20% Fe
Iron, pure	.178	25,000	350,000	Annealed
Iron, Swedish	.172	250	5,500	
Iron, cast	.057	100	600	
Kovar A	.006			29% Ni, 17% Co, 0.3% Mn, 53.7% Fe
Lead	.079	1		
Magnesium	.387	1		
Manganin	.039			84% Cu, 12% Mn, 4% Ni
Monel Metal	.041			67% Ni, 30% Cu, 1.4% Fe, 1% Mn
Mumetal	.034 - .069	20,000	100,000	71-78% Ni, 4.3-6% Cu, 0-2% Cr, bal. Fe
Nickel	.250	110	600	
Nickel-silver	.062			64% Cu, 18% Zn, 18% Ni
Palladium	.160	1		
Permalloy	.038	2,500	25,000	45% Ni, 55% Fe
Permendure	.066	800	4,500	50% Co, l-2% V, bal. Fe
Platinum	.164	1		
Rhodium	.338	1		
Rhometal	.019	1,000	5,000	36% Ni, 64% Fe

Table 1-29 (Continued)

Relative Conductivity and Relative Permeability of Common Metals

Metal	Relative Conductivity (g_r)	Relative Permeability (μ_r) Initial	Relative Permeability (μ_r) Maximum	Comments
Sendust	.022 - .029	30,000	120,000	10% Si, 5% Al, 85% Fe (cast)
Silver	1.064	1		
Steel	.078 - .133	50	100	0.4%-0.5% C, bal. Fe
Steel, manganese	.025			13% Mn, 1% C, 86% Fe
Steel, silicon	.034	500	7,000	4% Si, 96% Fe (hot rolled)
Steel, stainless	.019			0.1% C, 18% Cr, 8% Ni, 73.9% Fe
Supermalloy	.029	100,000	1,000,000	79% Ni, 5% Mo, 16% Fe
Tin	.151	1		
Titanium	.036	1		
Tungsten	.315	1		
Zinc	.287	.1		

e. Cover all openings required for visual access with wire screen or conductive glass (see Volume I, Section 8.5.3.2). Insure that the screen or glass is carefully bonded to the enclosure around the perimeter of the opening.

f. Doors should be metal with solid, uniform contact around the edges. Wire mesh gaskets or finger stock should be provided.

g. For large shielded enclosures where high traffic volume is expected, consider the use of waveguide-below-cutoff hallways.

1.9 COMMON-MODE NOISE AND INSTRUMENTATION. There are several steps which can be taken during the design and construction stages of a facility to minimize subsequent common-mode noise problems in instrumentation, equipment, and systems. The recommended steps should be recognized as being appropriate for interference control in general and not limited strictly to common-mode noise.

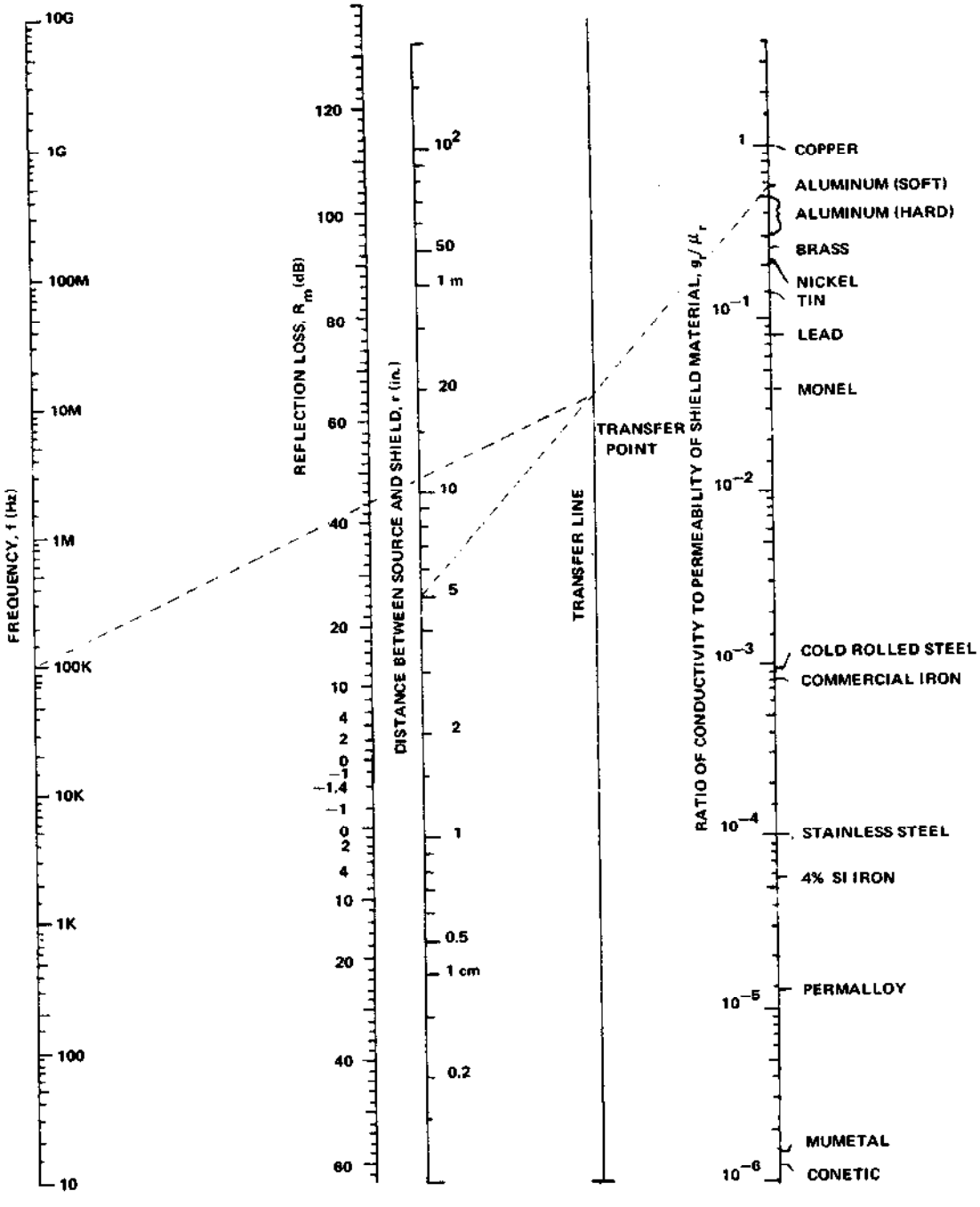

Figure 1-86. Nomograph for Determining Magnetic Field Reflection Loss (1-17)

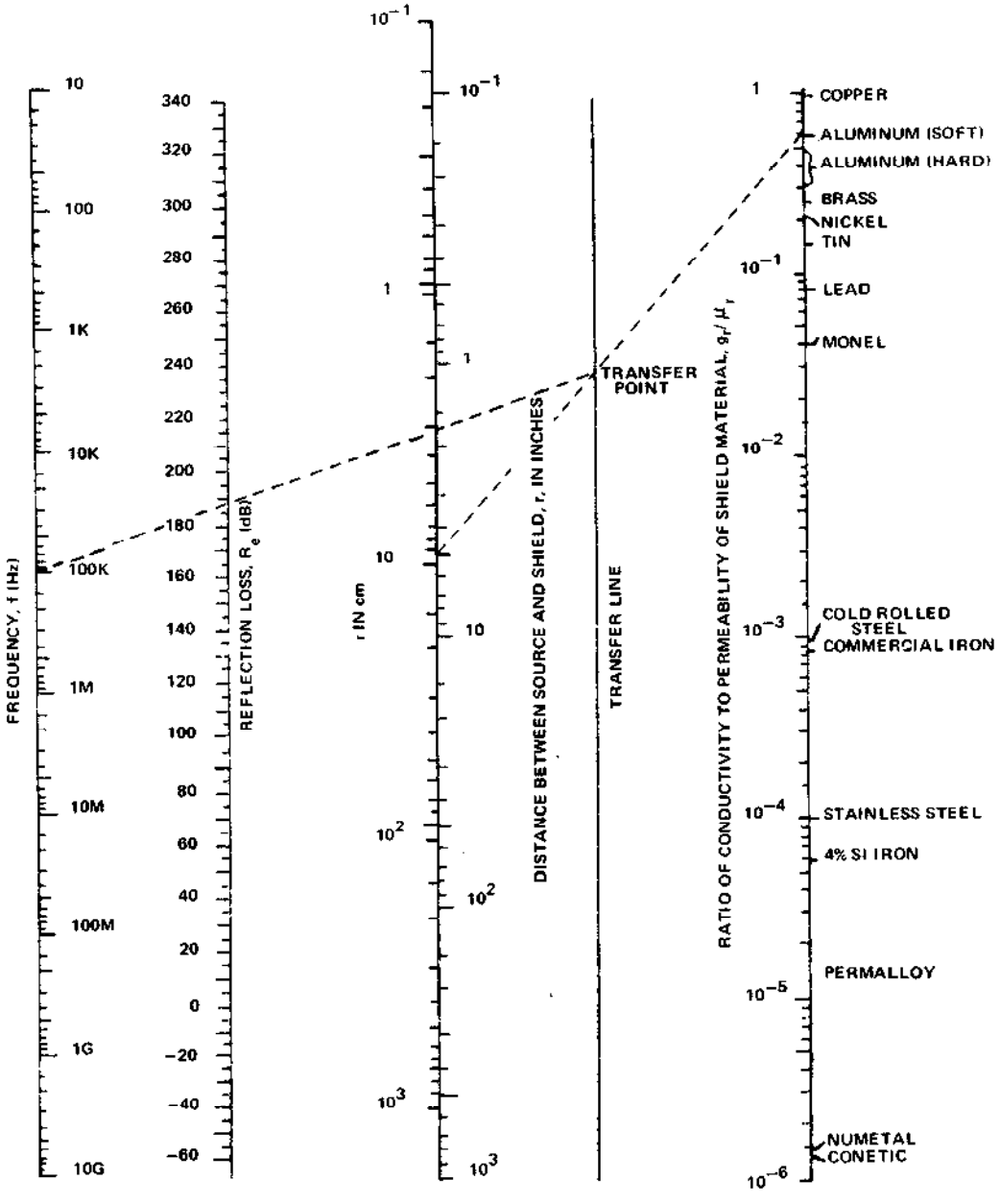

Figure l-87. Nomograph for Determining Electric Field Reflection Loss (1-17)

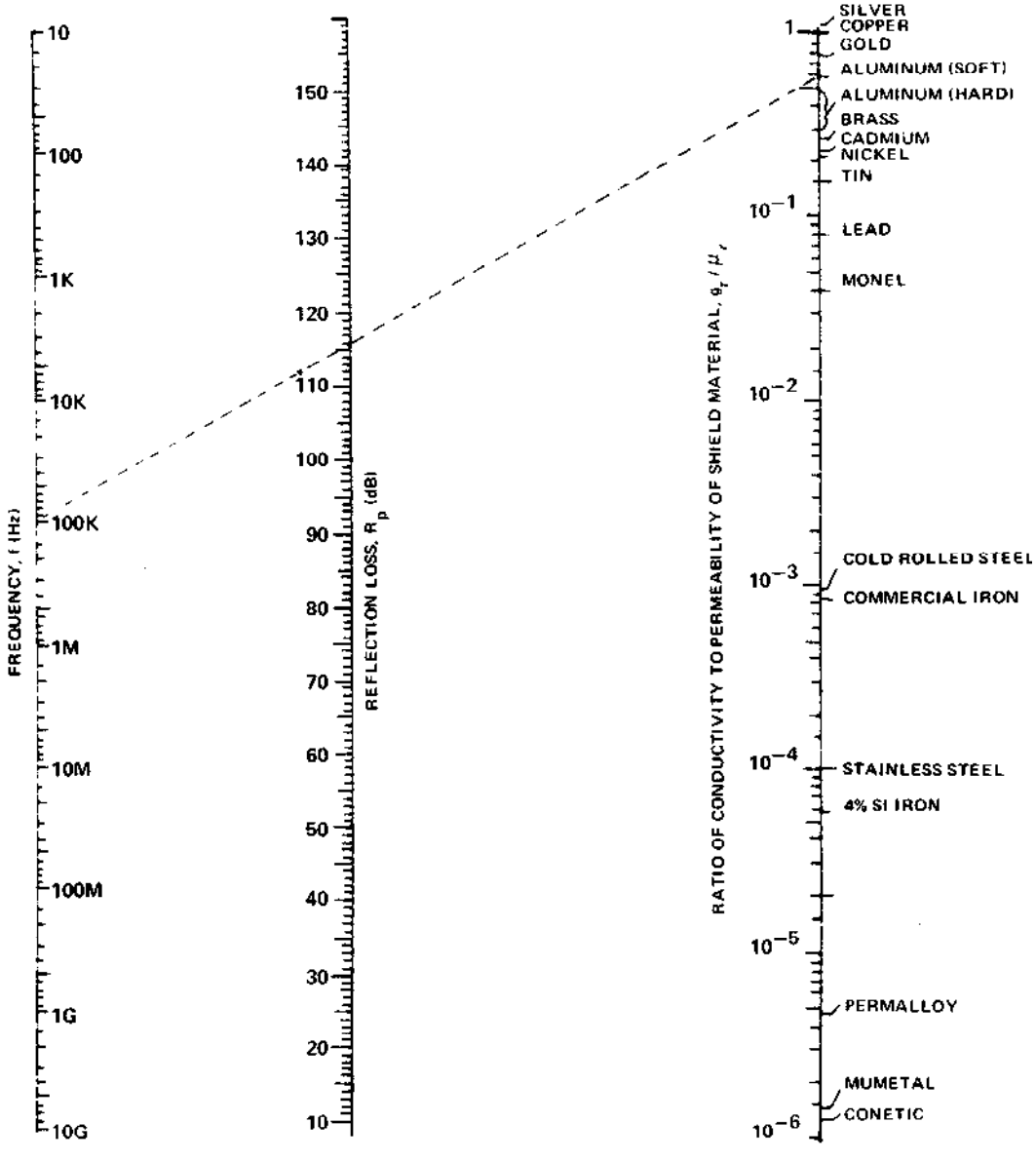

Figure l-88. Nomograph for Determining Plane Wave Reflection Loss (1-17)

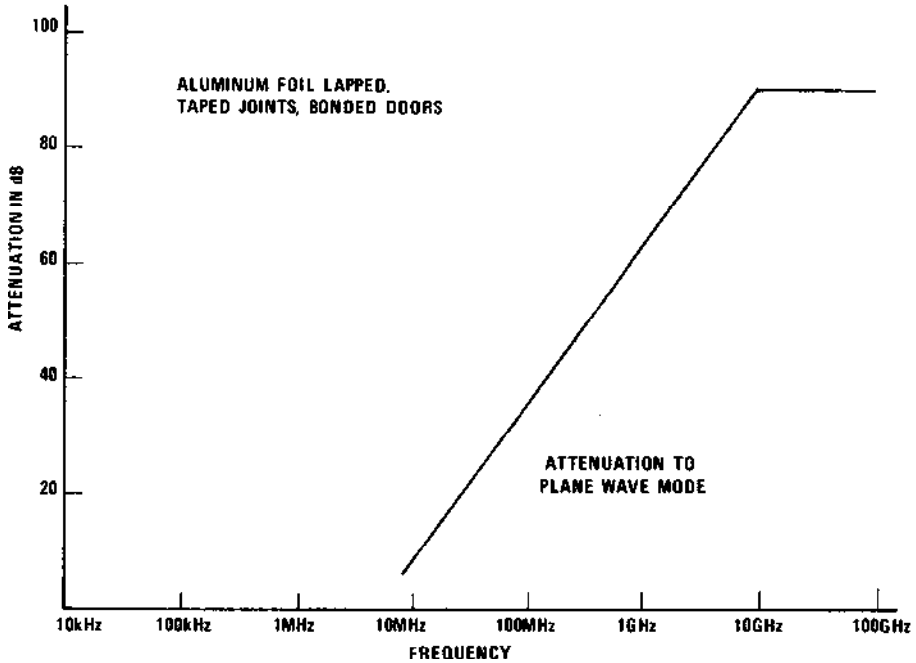

Figure l-89. Shielding Effectiveness of Aluminum Foil Shielded Room (1-18)

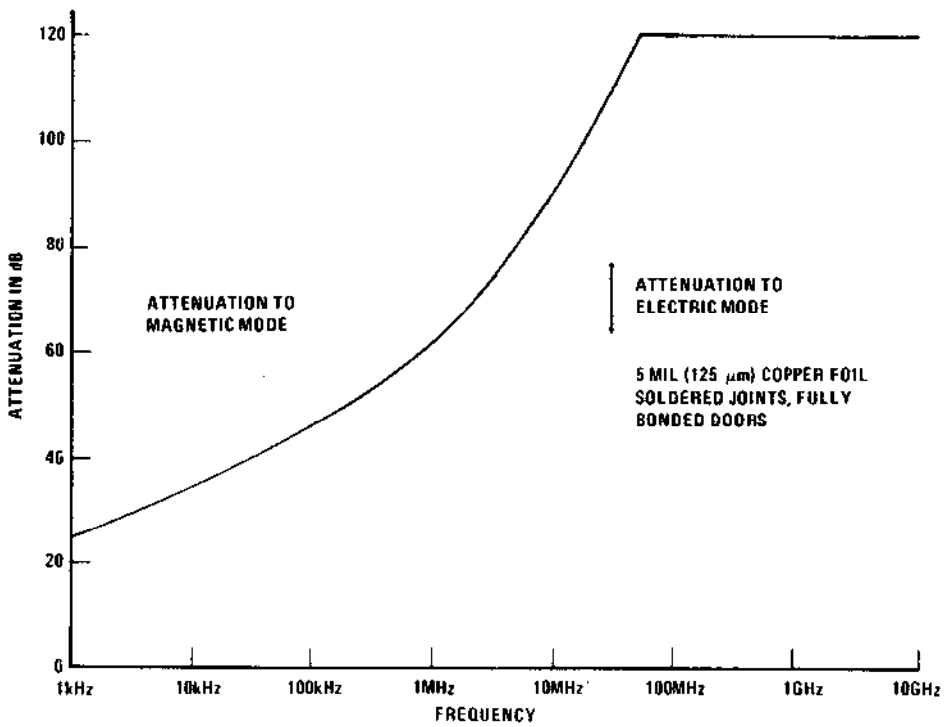

Figure l-90. Shielding Effectiveness of Copper Foil Shielded Room (1-18)

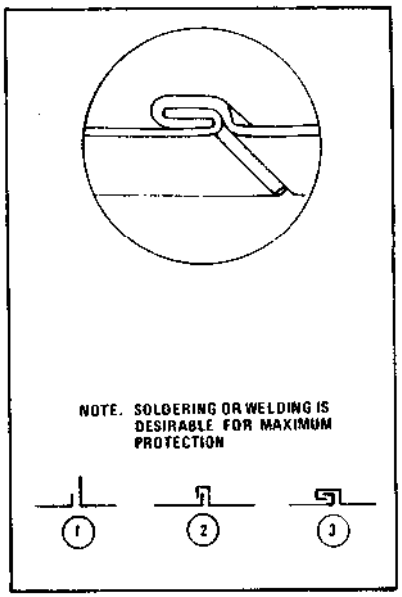

Figure 1-91. Formation of Permanent overlap Seam

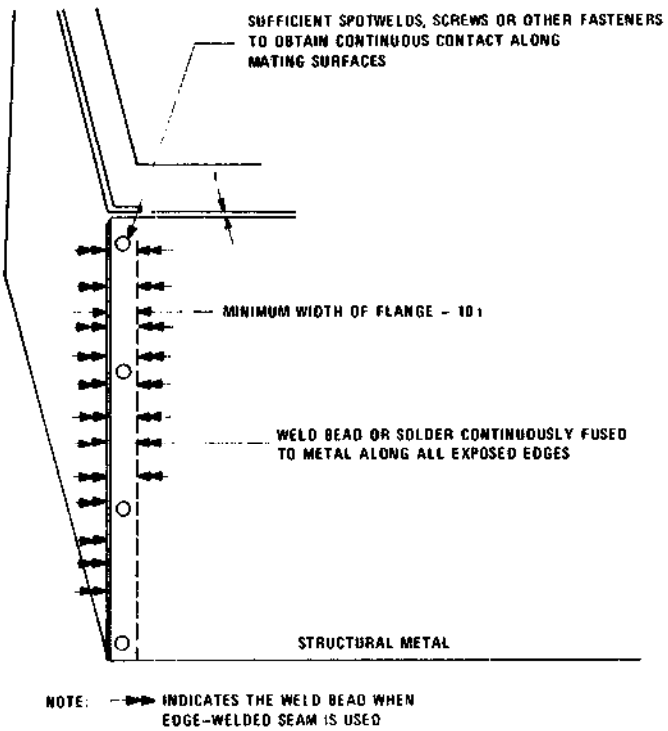

Figure l-92. Good Corner Seam Design

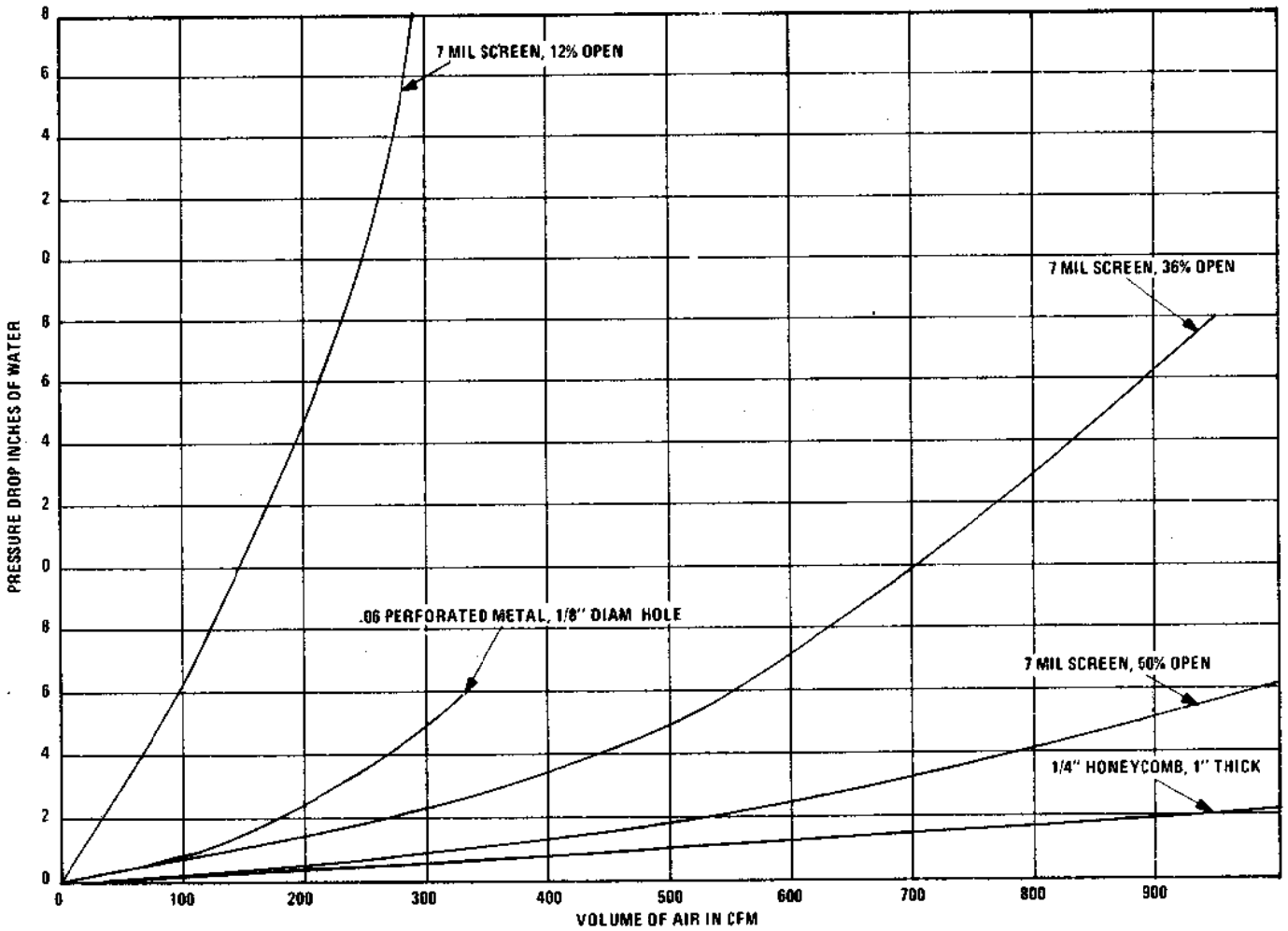

Figure 1-93. Pressure Drop Through Various Materials Used to Shield Ventilation Openings

1.9.1 Design Practices.

a. Sensitive data and instrumentation facilities should be located as far as possible from high voltage (66 kV and above) transmission lines.

b. The routing of data and signal lines should be perpendicular to main power lines wherever possible. Where parallel runs cannot be avoided, maximum separation must be maintained. In many instances, routing of the data and signal cables in ferrous conduit may be necessary.

c. Distribution feeders to the facility should be routed perpendicularly to high voltage power lines, if possible. In any event, long parallel runs between distribution feeders and the main power line should be avoided.

d. Where overhead distribution lines are necessary, pre-assembled aerial cable should be used in preference to open wires. Since the conductors of pre-assembled aerial cable are twisted, the associated magnetic field is greatly reduced.

e. All internal distribution power conductors near sensitive test and measurement facilities and carrying more than 5 amperes should be twisted. A suggested rate of twist is one complete twist for each length equal to approximately 25 times the diameter of the insulated power conductor.

f. Metallic enclosures should be used for power conductors wherever possible to take advantage of the shielding they offer. In order of preference, the types of enclosures recommended are:

(1) Conduit. From the standpoint of noise reduction, rigid steel conduit is the most effective enclosure for power conductors and should be used wherever practical. Electrical metallic tubing (EMT) and rigid aluminum or copper conduit provide effective electrostatic shielding, but their magnetic shielding properties are at least an order-of-magnitude poorer than rigid steel conduit.

(2) Cable armor. Armored cable is sometimes used in lieu of conduit and individual insulated conductors. The armor provides an effective electrostatic shield but is not as effective as rigid steel conduit for magnetic shielding. Steel armor is preferable to aluminum or bronze.

(3) Flexible conduit. Because of its construction, standard construction grade flexible conduit is a poorer electrostatic shield than either of the above and provides considerably less magnetic shielding than rigid steel conduit. It is recommended that the use of flexible conduit be restricted to short lengths and only where required to absorb vibration or to permit position adjustment of the equipment or device served.

(4) Wireway or cable tray. Wireways, which are rectangular sheet metal duct-like enclosures, and cable trays are not nearly as effective for electrostatic or magnetic shields as rigid steel conduit. Unless the wireway or cable tray is made of a ferrous metal and all discontinuities are carefully bonded, its use for the shielding of power conductors should be limited.

g. Electrical power equipment such as transformers, line voltage regulators, motors, generators, and switching devices should be separated as far as possible from data system equipment and conductors. The architectural arrangement of the facility should allow for the maximum distance between these devices and the data systems. This requirement also applies to heating, ventilating, and air conditioning equipment which utilize electric motors and high amperage switching devices. The maximum distance will be limited by the voltage drop which can be tolerated in feeders to the system equipment.

h. Use squirrel cage induction motors, which do not utilize slip rings or commutators, wherever possible.

i. Where necessary to specify motors with commutators, specify those properly designed to minimize arcing. Arcing at the commutator or slip rings can be decreased by careful mechanical design such as requiring adequately sized shafts and bearings which maintain concentricity to minimize brush bounce and vibration.

1.9.2 Instrumentation Considerations. Where transducers and associated processing devices are to be installed as an integral part of a facility, the instrumentation system must be designed and installed such that it does not compromise the single-point signal ground networks used by other lower frequency systems. In particular, where the systems interface, care must be utilized to assure that the grounding integrity of each is maintained.

Derive the ac power for the test equipment from the same branch circuit supplying the equipment or system being measured. If this practice raises system reliability problems, low amperage breakers or fuses should be provided for the test equipment outlets. If the outlets for test equipment cannot be connected to the branch circuits feeding the primary equipment, then the test equipment branch circuit should be restricted only to test equipment use. In particular, rotating machinery, industrial machines, appliances, vending and office machines, and any other non-EM1 protected equipment should not be connected to that branch circuit.

1.10 EMP PROTECTION. EMP protective measures are based on intercepting the incident energy and dissipating it or reflecting it away from the threatened device, equipment, or facility. These measures are implemented by providing adequate metal shielding around the facility (or the equipment inside); by installing fast response surge arresters on power, signal, and control lines; by terminating the shields and arresters in an earthing connection offering a low impulse impedance; by carefully controlling the points of penetration of collectors; and, finally, by paying particular attention to all bonds throughout the protective system.

1.10.1 Earth Connection. A radial, or star, configuration is preferred to other types of earth electrode subsystems because of its lower impulse impedance (see Volume I, Section 2.6.3). Where EMP protection is to be provided in addition to conventional signal and safety protection, supplemental radials may be added to the conventional system.

One low-impulse impedance radial should be placed at each location where there are over voltage arresters or protectors on incoming external lines or conductors. An example of such a location is the point where commercial power lines enter the first stepdown transformer. Another location is at the point where external conductors enter the shelter itself and where protectors or arresters are located.

Water pipes or conduit should be connected to the earth electrode subsystem to prevent ground currents from entering the structure. Further, at the first service disconnect the ac neutral should be grounded at only one point (to EES) to prevent the possibility of damage to transformers from circulating currents. This does not negate the NEC requirement to ground the neutral at the transformer.

1.10.2 EMP Shield Applications.

a. Whenever feasible, shielding of the overall building should be done in preference to room or area protection. Individual room or area shields should only be utilized to provide additional protection of critical equipment when normal protective methods will not reduce EMP to an acceptable level, or where, in retrofitting an existing structure, the cost of protecting the entire building is excessive.

b. Commercial enclosures may be used for small rooms and bolted construction is acceptable. For large room construction, however, continuously welded steel is preferred.

c. Electrical wiring and components should be protected from EMP fields by a shield such as ferrous conduit, RF shielded raceway, or cable armor, that completely surrounds the items to be protected. Electronic components may be shielded with sheet metal housings.

d. All metallic penetrations of the facility shielding should enter at a common location as illustrated in Figure l-94. All shielded cables, conduits, and pipes should be bonded to an entry plate as shown in Figure l-95. This plate should be large enough so that no penetrations will occur within 1 foot of the nearest edge. The entrance plate should be continuously welded, around its perimeter, to the building shield. The conduit should be of steel with threaded or welded couplings. Conduit runs should be as short as practical with joints held to a minimum. Transient protection for cables entering a building at points away from the building entry plate is provided by following procedures outlined in Section 1.3.3.5.26.

1.10.3 EMP Bonding Practices.

a. Homogeneous welds should be used whenever possible because they offer the best protection against penetration of the EMP signal.

b. When bolts are used as fasteners, the body of the bolt should not be welded or brazed. The nut and washers should be located inside the shield region where they will not be exposed to the incident field. Nuts should be checked for tightness periodically during EMP hardness assurance test cycles.

c. Pipes, conduit, and connector shells should be welded or brazed to the shield completely around their perimeter at the point of penetration of the shielded region. Conductors used for grounding purposes shall not penetrate any metallic barrier designated as an EMP shield ,i.e., shielded enclosure, EMP vault etc., but shall rather be bonded to a welded stud on the barrier.

d. Indirect bonding jumpers and straps should be as wide as practical and as short as possible to minimize the inductance of the path for the EMP-induced current.

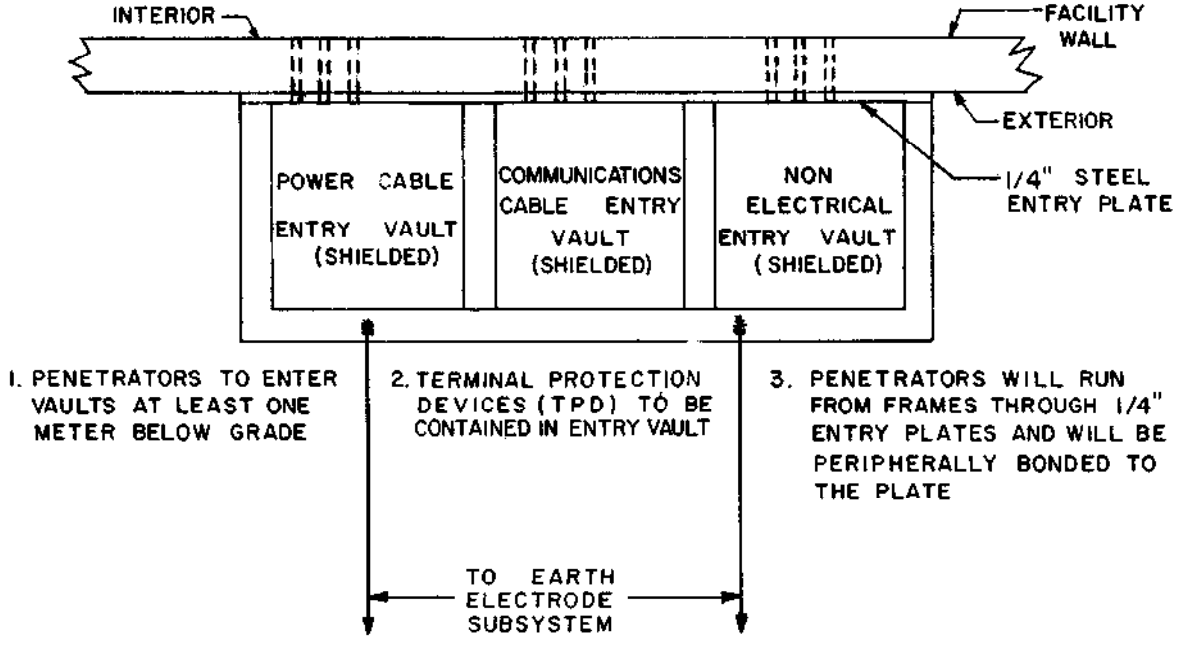

Figure l-94. Typical Single-Point Entry for Exterior Penetrations (Top View)

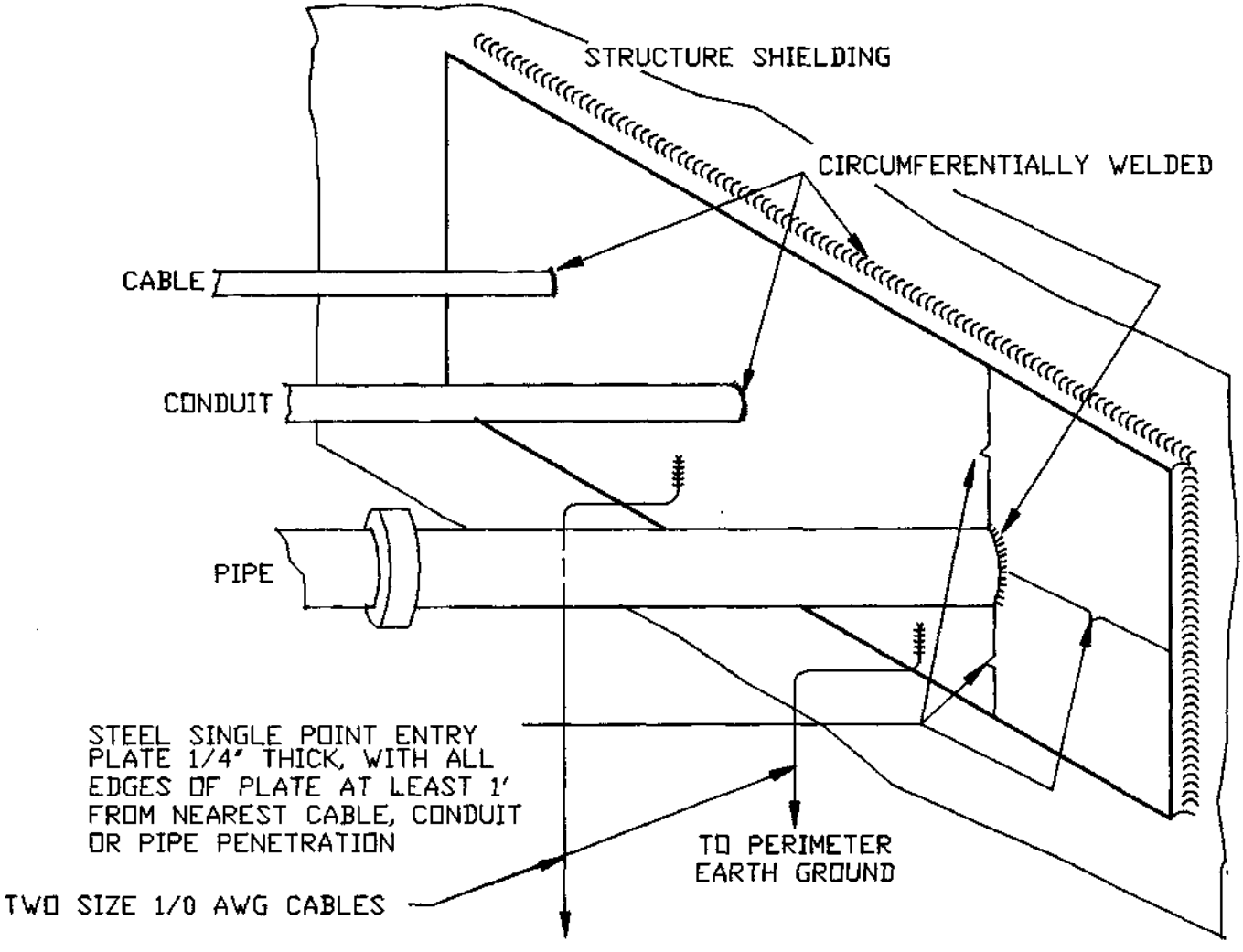

Figure l-95. Entry Plate Showing Rigid Cable, Conduit, and Pipe Penetrations

1.10.4 Construction Guidelines (1-14). The following is a list of additional construction practices which have proven effective in reducing problems of EMP interference and/or instrumental damage:

a. Isolate power by using internal motor-generator sources and installing lightning arresters on lines.

b. Put all external wires in continuous, properly grounded ferrous conduit.

c. Screen over air-conditioning ducts, where they enter shielded areas, must be peripherally bonded to the shield.

d. Interconnect the steel reinforcing bars in concrete into the shielding and grounding systems for the structure.

e. Use lightning arresters on power station transformers.

f. Provide all surge arresters with shortest possible leads.

g. Ground cable outer shields and insure that the shields are continuous and closed throughout their lengths.

h. Bury power and signal cables in ferrous conduit as deeply as is economically feasible (greater than 0.9 meter (3 feet)) to reduce current surges and to slope wave fronts induced on the cables.

i. Install transient protective devices (TPD's) on all antennas and other electric lines exposed to the external environment.

j. Educate personnel in proper protection practices; for example, extension cords connected to outside plugs should not be brought into shielded areas.

k. Bond together and ground all nonelectrical conductors such as elevator cables, metal airducts, and storage cabinets.

l. All conduit penetrations must be peripherally bonded to the shield.

m. Avoid use of nonconducting lubricants when fastening conduit pipes together.

n. Ensure that a low resistance circumferential electrical weld exists wherever conduit penetrates the EMP barrier.

o. When closed, the cover should provide peripheral contact with the box.

p. Either use adequate surge protection on oil-filled transformers and other high voltage gear to prevent explosions or use only dry transformers inside the shielded enclosure.

q. Provide adequate surge protection for emergency power equipment.

r. Do not rely on fuses or circuit breakers for EMP protection.

s. Provide automatically closing doors in preference to manually closed doors.

t. Put single-phase protection on each phase of S-phase power systems as well as on the neutral.

u. Use passive low pass L-C radio interference filters on signal, control, and telephone lines.

v. Since electromagnetic fields in the corners of a shielded structure are usually higher than in other parts of the structure, when convenient do not locate known sensitive equipments in corners.

1.11 MILITARY MOBILE FACILITIES.

1.11.1 General Tactical Grounding Requirements.

1.11.1.1 Facility Ground System. The facility ground system connects any metallic element of the associated subsystems to earth by way of an earth-electrode configuration. It establishes a reference potential common to any equipment or subsystem, and makes the ground potential available throughout the system. This section describes the four subsystems that comprise the facility ground system and should be addressed during the design and installation of any electrical and electronic equipment, subsystem, and system. Although, it is not possible to have a fixed set of rules governing the grounding of all conceivable electrical or electronic equipment or system configurations, the guidelines presented here should be adapted to the requirements of a particular tactical installation.

1.11.1.1.1 Earth Ground. A good, basic earth ground or earth electrode subsystem is the fundamental network for establishing a ground point for the three remaining ground subsystems; lightning/EMP, signal reference, and fault protection. An ideal earth electrode subsystem will provide a common potential reference point anywhere in the system to eliminate undesirable voltages and currents.

1.11.1.1.1.1 General Earth Electrode Subsystem Requirements. An earth electrode subsystem is a network of electrically interconnected rods, plates, mats, or grids installed with a system to establish a low-resistance contact with earth. As a design objective, the dc resistance to earth of the earth electrode subsystem should not exceed 10 ohms.

1.11.1.1.1.2 Earth Electrode Subsystem Types. There are earth electrode subsystems for the following two types of facilities:

a. Fixed Site Facilities. Descriptions of earth electrode subsystems installed in fixed facility or semi-permanent buildings or installations are contained in Sections 1.2 and 1.4.

b. Tactical Facilities. Tactical earth electrode subsystems are connected to existing buried low resistance facilities, if available, or to driven ground rods or ground-rod configurations. Total resistance to earth is affected by the type of soil, contact resistance between ground rod and soil, and by the connector resistance.

1.11.1.1.1.3 Soil Resistance. Resistivity of the soil into which the earth electrode subsystem is buried constitutes a basic constraint on achieving low ground resistance. Soil resistivity, measured in ohm-m, is defined as the electrical resistance of a cube of homogeneous material (soil). Table l-30 contains sample resistivity values of various soil types. Soil temperature and moisture content are other variables affecting ground resistance. Ground resistance increases inversely as the soil temperature with only slight changes in ground resistance occurring above 32 degrees Fahrenheit. Soil resistance also varies widely as a function of moisture content. Additional information on soil resistance is contained in Sections 1.2.2 and 1.2.3 of this Volume, and Section 2.3 of Volume I.

1.11.1.1.1.4 Ground Rod Resistance. Ground rod resistance is primarily a function of the depth the rod is driven into the earth and the soil resistivity. Theoretically, the resistance (R) of a ground rod driven vertically into uniform soil is:

$$R = \frac{\rho}{2\pi\ell} \ln \frac{4\ell}{d} \qquad \text{(l-3)}$$

where ρ is the resistivity of the soil, ℓ and d are the rod's length and diameter, respectively. Figure l-96 illustrates the measured effect of rod length on total ground resistance.

1.11.1.1.1.5 Ground Resistance Shells. Associated with a driven ground rod injected with current are imaginary ground resistance shells. The concentric shells of resistance outward from the rod are a function of the earth's resistance to flow of current. The shell having the smallest cross-sectional area closest to the ground rod will exhibit the largest incremental resistance. Approximately 90 percent of the shells of total resistance to the earth occur, on the average, within a radius of two rod lengths from the electrode.

1.11.1.1.2 Power Ground. Power supplied to tactically-deployed equipments and systems may be derived from three sources; transportable ac power generators, commercially-available ac power, and battery supplied dc power. The ac neutrals are always floated on the load side of the first service disconnect within the shelter. The 5-wire system described in 1.11.1.1.2.1 is preferred for new systems. If multiple shelters are serviced from a single power source (transformer or generator), or if hum is encountered, the neutral conductor should be grounded at the source only.

1.11.1.1.2.1 Three-Phase Power Distribution System. Transportable power generators presently used with military mobile equipments are 3-phase, 4-wire, 120/240 V ac wye distribution systems. Ground points of a S-phase wye system are illustrated in Figure l-97. Five-wire ac power grounding requires that the neutral (white) or grounded conductor be connected to an earth ground at the source (generator or transformer) and again at the supply side of the first service disconnect/power entry panel (PEP). The grounding (green) conductor should also be connected to earth ground at the first service disconnect and at the transformer.

Table l-30. Soil Resistivity (ohm-m)

Type of Soil	Resistivity Minimum	Average	Maximum
Sandy, dry, flat, typical coastal areas	3×10^4	5×10^4	5×10^5
Fills, ashes, cinders, brine, waste	6×10^2	2.5×10^3	7×10^3
Clay, shale, gumbo, loam	3×10^2	4×10^3	2×10^4
Same as above with varying proportion of sand and gravel	10^3	1.5×10^4	10^5
Gravel sandstones with little clay, loam, or granite	5×10^4	10^5	10^6

1.11.1.1.2.2 Single-Phase Power Distribution System. Commercially-supplied ac power is single-phase, 110/220V. Power neutral of these systems is first grounded at the transformer secondary and also at the first service disconnect. Figure l-98 illustrates the ground connections of a single-phase power system.

1.11.1.1.2.3 DC Power System (2-Wire). A 2-wire dc power generator is grounded by connecting either the positive or negative conductor to ground at one point only, preferably at the source. The neutral (or grounded) conductor should not be grounded at the Power Entry Panel (PEP), Figure l-99 shows the ground connections for the 28 V dc power system. The 3-wire dc power system requires that the neutral wire (white) or grounded conductor be connected to the earth ground at the source (generator or transformer) only.

1.11.1.1.3 Lightning/EMP Protection Subsystem. Low resistance earth grounds are important for lightning/EMP ground subsystems. For these subsystems, low resistances to earth are necessary to reduce the possibility of arcing generated by potential differences between the earth and nearby equipments or shelters and to reduce step potentials and voltage gradients in the vicinity where a lightning discharge enters the earth. See Sections 2.8.1.3 and 3.6.3.4 of Volume I for additional information. The need for lightning protection in a tactical environment is determined by the frequency and intensity of lightning activity in the area and by the type of structures needing protection. The lightning protection subsystem down conductor should be connected to the earth electrode subsystem at a point removed from the signal reference and fault protection subsystem. Two general ways of protecting against lightning damage are air terminals and surge protection devices.

1.11.1.1.3.1 Air Terminals. To protect a shelter from damage caused by a lightning stroke, an air terminal of adequate mechanical strength, length, and electrical conductivity to withstand the stroke must be provided to intercept the discharge before it penetrates the structure. A low-impedance path (cable) must be established between the air terminal and earth electrode subsystem. The resistance of the earth electrode subsystem should be less than 10 ohms. Detailed construction of air terminal systems are given in Section 1.3.2.1.

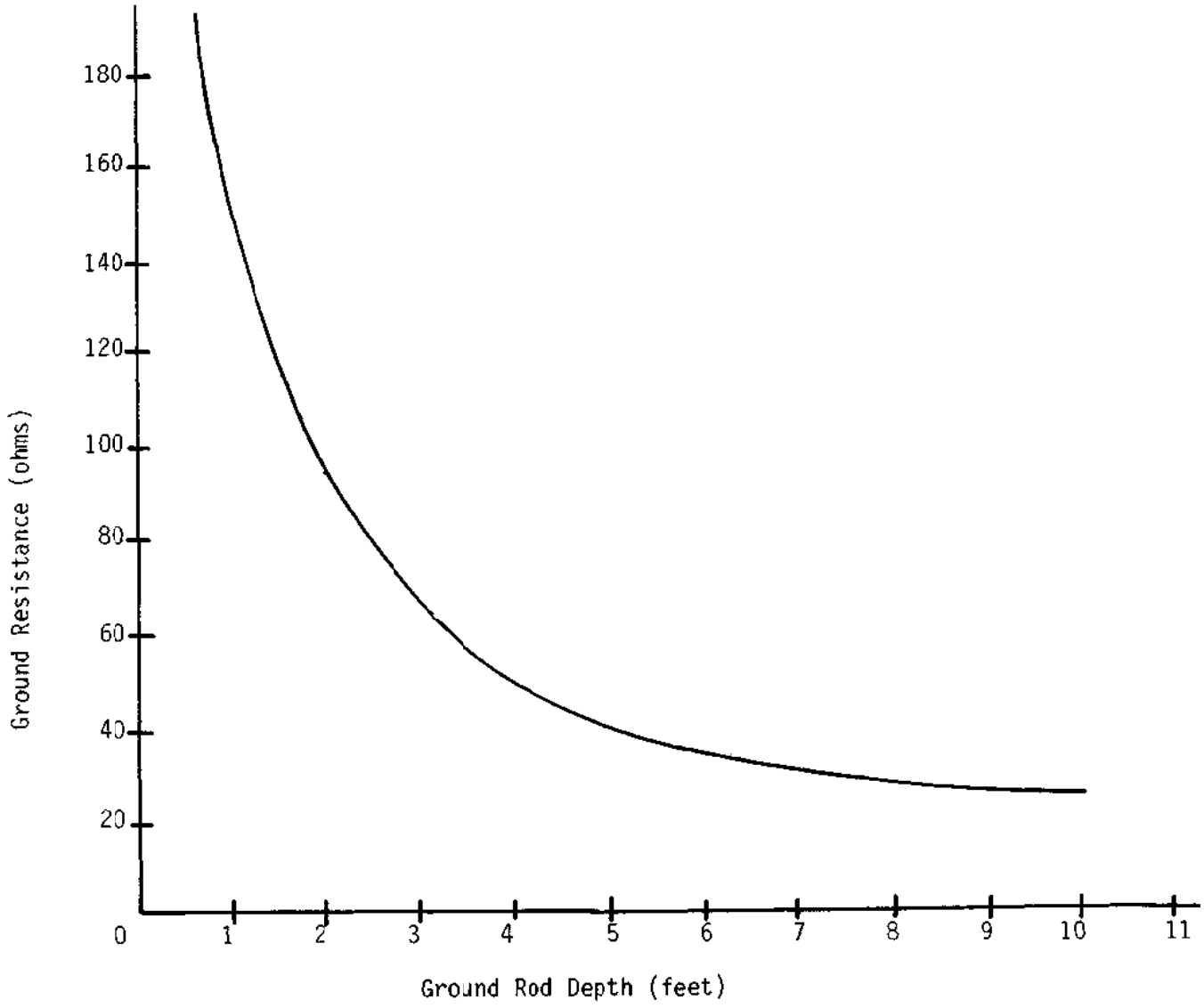

Figure 1-96. Effect of Rod Length on Ground Resistance

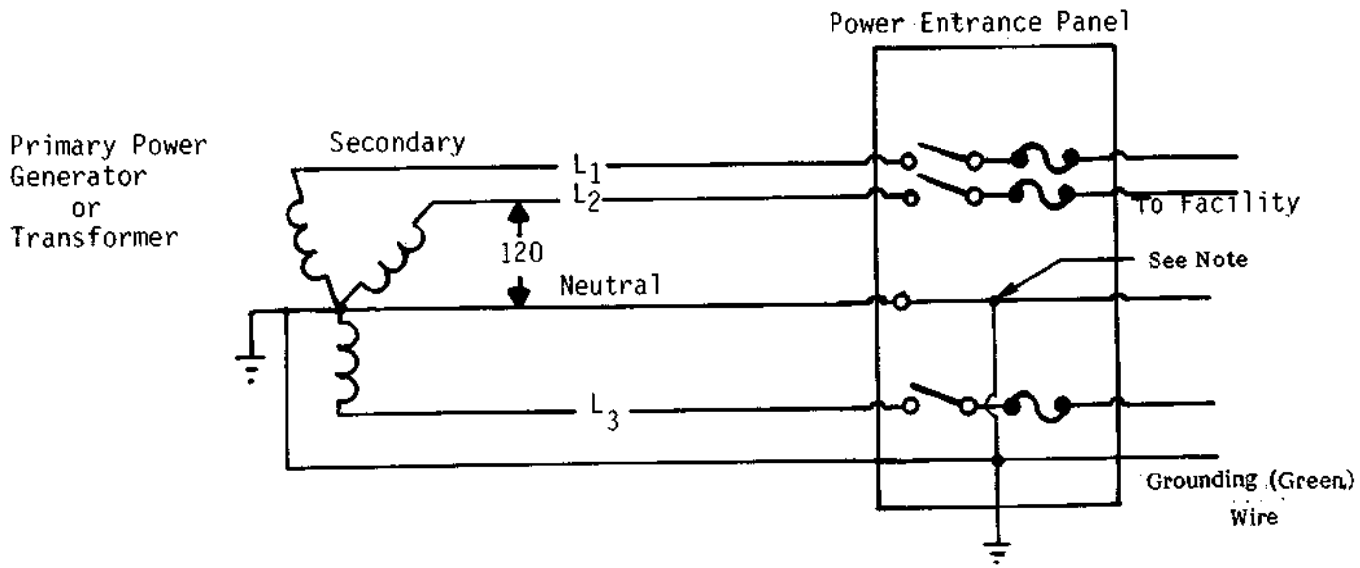

NOTE: LIFT WHEN SINGLE TRANSFORMER SUPPLIES POWER TO MORE THAN ONE BUILDING OR BECAUSE OF OBJECTIONABLE CURRENT, NOISE OR INTERFERENCE.

Figure 1-97. Grounding of 120/208V 3-Phase, 4-Wire Wye Power Distribution System

1.11.1.1.3.2 Terminal Protection Devices. Terminal Protection Devices (TPDs) and electromagnetic shields provide additional means of lightning and/or EMP protection (Section 1.3.3.5.11). The TPDs are fast-response protection devices installed on exposed circuits such as power lines, signal, and control cables. Lead lengths of each TPD shall be kept to an absolute minimum. They are installed on lines for the purpose of shunting extraneous pulses to ground and are typically installed on signal and power lines at their point-of-entry into a shelter's signal entry panel. Examples of commonly used terminal protection devices are carbon blocks, gas-filled spark gaps, zener diodes, and EMI power and signal line filters. Surge arresters used to protect a system against lightning may serve to protect it against certain types of EMP given the response time of the arrester is properly designed (see Volume I, Section 10.4.2.3).

1.11.1.1.4 Signal Reference Subsystem. Grounding techniques used in the signal reference subsystem are a function of operating frequencies. Lower frequency circuits (30 kHz and below) shall be single point grounded. Higher frequency circuits (above 30 kHz) shall employ an equipotential plane which may, in the case of a metallic van or shelter, be the skin of the housing. All equipment cases or cabinets must be bonded to the equipotential planes by the shortest and most direct route. In fixed site facilities an equipotential plane will be installed in accordance with Section 1.5.1. If a combination of both higher and lower frequencies circuits exist, use the higher frequency signal ground technique. All digital circuits are considered higher frequency signal circuits. Signal reference subsystems, in a multishelter configuration shall be bonded to a common earth electrode subsystem at one point only to minimize inter-shelter interference on signal cabling.

1.11.1.1.5 Fault Protection Subsystem. The fault protection subsystem (grounding/green conductor) shall be designed to carry current only in the event of equipment or system faults. The fault protection subsystem includes equipment racks, cabinets, conduit, junction boxes, raceways, ductwork, pipes and other normally non-current carrying metal elements. For shelterized equipments, the fault protection subsystem is connected to the earth electrode subsystem via the power entrance panel. Care should be taken to ensure the fault protection subsystem and the signal reference subsystem are not connected to the earth electrode subsystem at the same point.

1.11.1.2 Measuring Ground Resistance in Tactical Environments. The resistance to earth of the earth electrode subsystem shall be measured by the fall of potential technique (see MIL-STD-188-124A para 5.1.1.1.7 or Section 2.7.2 of Volume I). If the tactical situation does not permit this method to be used, the three-point or triangulation method is an adequate substitute. Section 2.7.3 of Volume I refers.

1.11.1.3 Reducing Ground Resistance in Tactical Environments. Three basic methods should be considered for grounding tactical equipments and systems; (1) utilization of earth electrode subsystems of existing/permanent facilities, (2) utilization of recently configured earth electrode, ground rod/ground rod configurations, and (3) utilization of antenna counterpoises (including radial grounds). These methods and means of reducing related resistance are described below.

1.11.1.3.1 Existing Facilities. Wherever feasible, installation of earth electrode subsystems should take advantage of the low-resistance properties of existing facilities such as water pipes, water well casings, plumbing, and other metals embedded in and in contact with the earth. Resistance of the facilities should be measured prior to use to determine if the 10 ohm or less resistance criteria is met. Use of existing facilities as grounding means is especially desirable in permafrost situations.

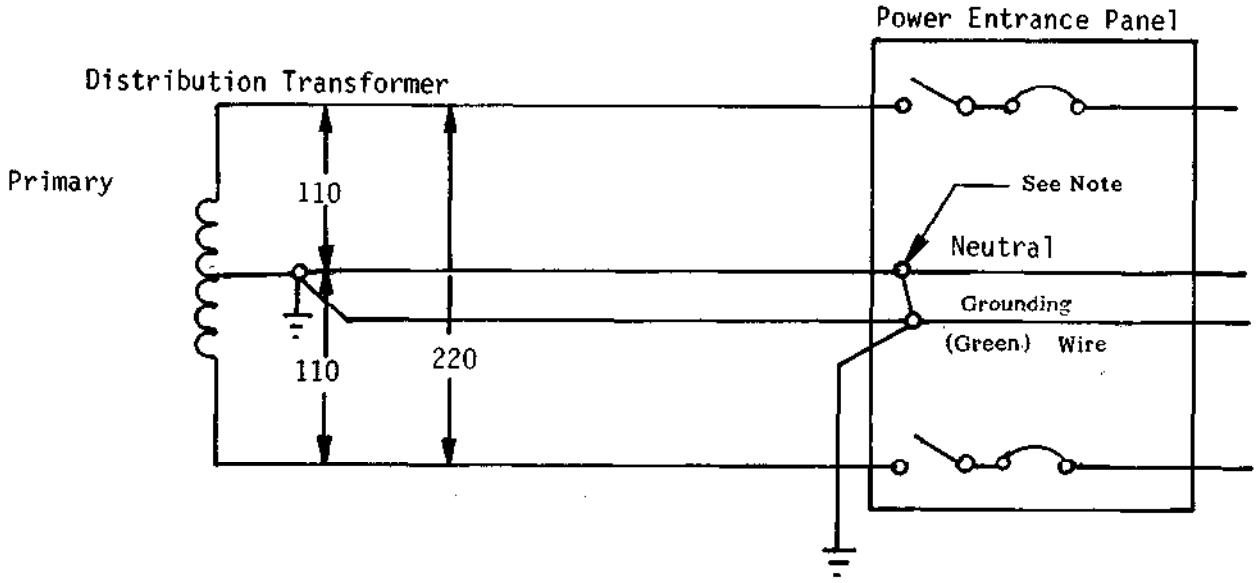

NOTE: LIFT WHEN SINGLE TRANSFORMER SUPPLIES POWER TO MORE THAN ONE BUILDING OR BECAUSE OF OBJECTIONABLE CURRENT, NOISE OR INTERFERENCE.

Figure l-98. Grounding of Single-Phase, 3-Wire 110/220V Power System

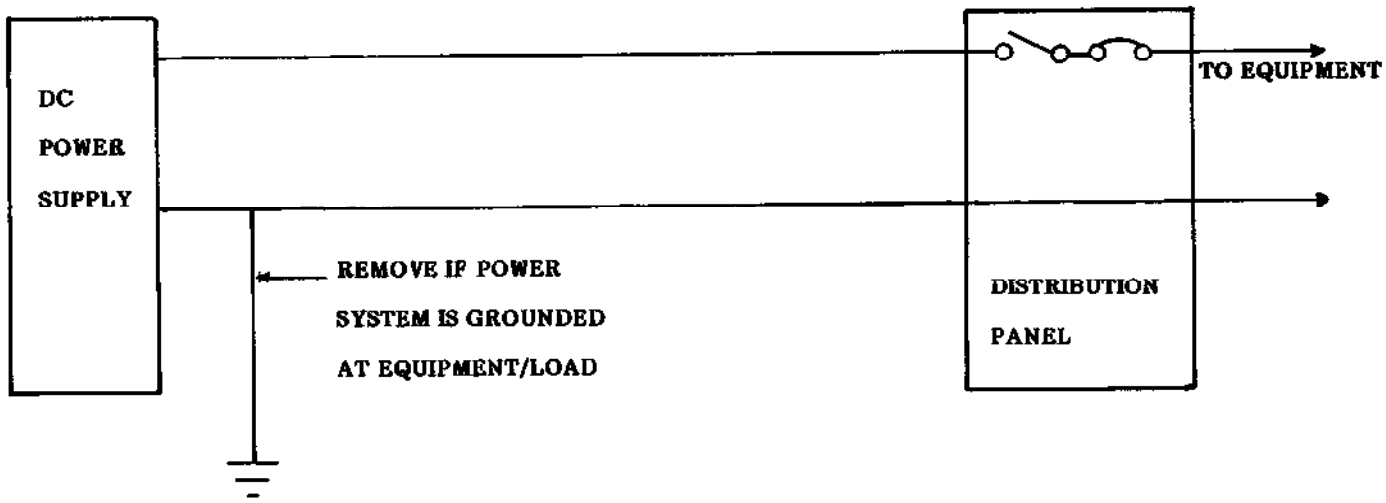

NOTE: ONE LEG OF EACH DC POWER SYSTEM SHALL BE GROUNDED BY A SINGLE CONNECTION EITHER AT THE SOURCE OR AT THE LOAD, BUT NOT BOTH.

Figure l-99. Grounding of 28V DC P-Wire DC Power System

1.11.1.3.2 Multiple Electrode System. The resistance of a single vertically driven ground rod may also be reduced if additional ground rods are connected in parallel with the given ground rod using a 1/0 AWG bare copper cable to interconnect the rods. It is however important to note that total system resistance is sensitive to electrode spacing. Electromagnetic interaction between multiple (M) ground rods that are spaced too closely prevents the resistance of the total earth electrode subsystem connected in parallel from being l/M times the resistance of a single rod. If the electrodes in a multiple electrode system are spaced at 1.5 to 2 times the length of a rod, the interactive influence is minimized and total resistance of the system will approach the ideal.

1.11.1.3.3 Earth Electrode Subsystem. The earth electrode subsystem should, soil and tactical conditions permitting, consist of properly spaced ground rods interconnected in parallel by a bare 1/0 AWG copper cable. The interconnecting cable for tactical situations should be clamped to the ground rods to facilitate installation and transportability. Earth electrode subsystems shown in Figures l-9 and l-100 may be installed around the perimeter of temporary enclosures housing several stand-alone equipments such as portable single subscriber terminals, telephones, or small switchboards. These earth electrode subsystems should extend 0.6 to 1.8 meters (2 to 6 feet) beyond the dripline of the enclosure to ensure that any form of precipitation wets the soil around the system. Earth electrode subsystems in radial or star configurations may be employed but are less suitable for (a) grounding equipments operating at rf such as radar or microwave systems, or (b) providing low impedance grounds between interfacing shelters required to lessen interference or voltage surges caused by lightning discharges. Means of calculating ground resistance of the entire earth electrode subsystem are described in Section 2.6 of Volume I while measurements of these systems are described in Section 2.7.

1.11.1.3.4 Chemical Treatment. The resistance of driven ground rods may be reduced by chemically treating the soil around the rod and the interconnecting cable/wire. Addition of ion-producing chemicals such as magnesium sulphate (epsom salts), sodium chloride (table salt), and potassium nitrate (saltpeter) as well as bentonite to the soil adjacent to an electrode has the net effect of increasing the apparent cross-sectional area of the electrode and minimizing the current density of the soil. Use of magnesium sulphate or bentonite is recommended because of their low corrosive effect on metal and high electrical conductivity. A circular trench approximately 0.3 meters (1 foot) deep and 0.9 meters (3 feet) in diameter should be dug around the electrode at a radius of 0.45 meters (1.5 feet) from the center of the electrode. The trench is filled with the saline solution and covered with earth. In order to provide the best distribution of the treating material with the least corrosive effect the solution should not actually touch the electrode. Additional information is provided in Section 2.9 of Volume I.

1.11.2 Detailed Tactical Grounding Requirements.

1.11.2.1 Introduction. It is important that serious consideration be given to grounding implementation. Proper grounding can have a significant impact on the ability to maintain communications under adverse conditions. This section contains grounding requirements for tactical deployments of mobile equipment. Grounding methods set forth are based not only on implementation considerations but also on complying with specific measured resistance requirements. The tactical deployments of mobile equipments are considered to be of four types; i.e., stand-alone equipment, stand-alone shelter, collocated equipments and collocated shelters.

1.11.2.1.1 Training. Installers and operators of communications equipment should be formally trained in the installation and maintenance concepts of grounding systems. This training should include instructions in the various types of grounding techniques and configurations, such as those listed:

Typical Training Requirements

Grounding Techniques -	Resistance Measuring Methods
	Reduction in Ground Resistance
	Initial Establishment of Grounding Systems as a Function of Terrain
Grounding Configurations -	Earth Electrode Subsystem (Single Ground Rod)
	Earth Electrode Subsystem (Multiple Ground Rods)
	Equipotential Plane
	Antenna Counterpoises
	Radial Single-Point Ground Networks
	Ground Systems on a Nodal Basis

1.11.2.1.2 Testing. Ground resistance measurements should be made upon installation of a ground system and at periodic intervals should the system remain in place for any length of time, or at any time extraneous noise occurs in the system. An earth resistance measurement set should be authorized to each unit to perform these resistance measurements. The earth resistance goal of 10 ohms or less should be obtained for stand-alone and collocated equipment. Where collocated equipment systems are separated by greater than 8 meters (26.5 feet), their difference in resistance-to-ground measurements in tactical situations may be higher. If noise or other undesirable effects are produced as a result of these higher ground resistance differences, the earth electrode subsystems of each facility should be interconnected using two bare 1/0 AWG copper cables or chemical treatment for soil enhancement should be applied to the subsystem having the higher resistance.

1.11.2.2 Stand-Alone Equipment.

1.11.2.2.1 General Description. The stand-alone equipments of the military mobile system are generally self-contained transportable field equipment. These equipments interface with other equipment over WF-16 wire or coaxial cables. Stand-alone equipments generally are totally self-contained with integral power supplies and grounding system. The primary emphasis of low resistance grounds for stand-alone equipments is to assure personnel safety and lightning protection. Lightning protection is needed to protect operating personnel from the effects of lightning that may impinge upon interfacing cable or from direct strike on the shelter.

1.11.2.2.2 Grounding Procedure. Means of providing lightning and safety protection on stand-alone equipments include low resistance grounds and installation of surge arresters on interfacing cabling.

1.11.2.2.2.1 Low Resistance Grounds. Obtaining and maintaining low resistance grounds are the responsibility of user personnel. To provide adequate lightning protection the resistance to ground should be less than 10 ohms. Realizable grounding alternatives for stand-alone equipments are:

1.11.2.2.2.1.1 Existing Facilities. If available, operating personnel should connect an interconnecting ground cable to an existing low resistance facility as specified in 1.11.1.3.1.

1.11.2.2.2.1.2 Earth Electrode Subsystem, Single Ground Rod. A single driven ground rod connected to the equipment via an interconnecting cable may be used, if the design resistance value is achievable. The rod should generally be between 1.8 and 3.0 meters (6 and 10 feet) long. Selection of the required type of ground rod should be based upon the expected soil conditions at the tactical site location. The resistance between the rod and earth should be measured in accordance with Section 2.7.2 of Volume I. Where measured resistance is not low enough, a saline solution (see 1.11.1.3.4) should be added to the soil adjacent to the rod to reduce ground resistance.

1.11.2.2.2.1.3 Earth Electrode Subsystem, Multiple Ground Rods. Where soil resistance cannot be reduced by chemical means additional electrodes may be connected in parallel with the given ground rod. The interconnecting cable should be 1/0 AWG bare copper cable, and the ground rods should be spaced 1.5 to 2 rod-length's apart to minimize overlapping shells (see 1.11.1.1.1.5).

1.11.2.3 Stand-Alone Shelter.

1.11.2.3.1 General Description. A stand-alone shelter is comprised of equipment housed in a mobile metallic shelter and typically, is not situated close enough to other equipments to merit construction of a common extensive earth electrode subsystem between its interfacing systems. Power supplied to the shelter may come from a power generator or a commercial source. Interfacing with the shelter may be through the power cable. The need for grounding stand-alone shelters is to provide a ground for (a) the fault protection subsystem, (b) to "bleed off" static charges or EMI from interfacing signal cables, (c) the signal reference subsystem, and (d) the (signal reference subsystem), lightning protection subsystem.

1.11.2.3.2 Interconnection of Subsystems. The signal reference and fault protection subsystems are connected to the earth electrode subsystem because of the following reasons: (1) the skin of the shelter generally serves as the equipotential plane for the signal reference subsystem, (2) the electronic equipment systems are connected directly to the skin of the shelter by the shortest route possible, and (3) the fault protection subsystem is connected to the grounding bus in the power entrance panel, and in turn, to the earth electrode subsystem. Since the power entry panel is bonded to the skin of the shelter, no loops are formed, and everything within the shelter will remain at the same potential in the event of power faults, EMP, lightning or EMI. If the lightning activity in the deployment area warrants additional shelter protection, air terminals should be installed atop the shelter as per 1.11.1.1.3.1. If the installation is long-term, lightning protection shall be mandatory.

1.11.2.4 Collocated Military Mobile Equipments.

1.11.2.4.1 General Description. Collocated mobile equipments are equipments operating individually but housed together within a single transportable enclosure, e.g., tarpaulin. Typically, these equipments are not rack mounted and may be situated on the ground. Metallic shelter enclosures are not considered here (reference 1.11.2.5). Intra-enclosure communication links may exist among equipments, but normally links are established between an equipment and an external system. Basic operational characteristics of collocated equipments are similar to stand-alone equipments. Grounding requirements are primarily for personnel safety from lightning and power faults.

1.11.2.4.2 Grounding Procedure. Each stand-alone equipment is deployed with at least one ground rod. If the total number of equipments within the enclosure are small enough and can be positioned such that the ground rod for each can be used without compromising grounding integrity, then existing low resistance facilities or a single driven ground rod per equipment may be used (reference 1.11.2.2.2.1) to ground collocated equipments. Where large numbers of equipments are housed within an enclosure for which the individual grounding procedure is not reasonable, a simple earth electrode subsystem should be deployed around the enclosure. The size of the ground system and the number of attached rods needed to achieve the required ground resistance should be determined according to 1.11.1.3.3. In deployment areas requiring additional lightning/EMP protection measures described in 1.11.1.1.2 shall be incorporated.

1.11.2.5 Collocated Shelters.

1.11.2.5.1 General Description. Collocated shelters are transportable metallic shelters that share common signal and/or power cables and are classified in two general categories; those located within 8 meters (26.5 feet) of one another and those located greater than 8 meters (26.5 feet) from one another (see Figure l-100). Collocated shelter configurations are typical of an equipment system that must be housed in multiple shelters. Grounding requirements for collocated shelters are required to provide personnel and equipment protection from the effects of lightning power faults and to provide a reference for signal grounds. Particular consideration must be given to collocated shelters receiving power from the same power source or communicating over inter-shelter signal cables. The need to establish an all encompassing shelter grounding system for collocated shelters situated more than eight meters apart should be a function of ground resistance measurements taken at each shelter site. The ground system of each shelter should be interconnected as shown in Figure l-100 using two bare 1/0 AWG copper cables. If noise or other undesirable effects are produced as a result of these higher ground resistance differences, the system having the higher resistance can be reduced by use of chemical treatment or enhancement described in 1.11.1.3.4 or Section 2.9 of Volume I.

1.11.2.5.2 Grounding Procedure.

1.11.2.5.2.1 Power Ground. Shelters powered by a single, common power source should have all grounded conductors (neutrals) grounded to one point at the generator. Where several power generators are connected in parallel, the power neutrals of the generators should be interconnected and grounded at a single point. For collocated shelters not sharing a common source but supplied by individual power sources, all neutrals may be bonded together and grounded at one point. The equipment shelters should share a common earth electrode subsystem if they are located within 8 meters (26.5 feet) of each other:

1.11.2.5.2.2 Signal Ground. Collocated shelters less than 8 meters (26.5 feet) with interfacing communications cables should have the signal grounding conductors bonded to a common earth electrode subsystem (see 1.11.1.3.3). This provides all interfacing shelters with a common signal reference plane.

1.11.2.5.2.3 Fault Protection Subsystem. Intra-shelter green wire equipment grounding conductors should be grounded at the power entrance panel of each shelter via the earth electrode subsystem.

1.11.2.5.2.4 Lightning/EMP Protection. Electrical surge arresters should be used on all power and signal cables at the shelter points-of-entry to provide protection from lightning and EMP induced currents on inter-shelter cabling. Lightning protection should also be provided in accordance with Section 1.3.

1.11.2.5.2.5 Collocated Shelters Greater than 8 Meters Apart. Collocated shelters located greater than 8 meters (26.5 feet apart refers to equipment systems consisting of multiple shelters (which has interfacing shelters located as much as 250 feet apart) as opposed to an equipment system in which all elements are housed in a single shelter. These shelters may therefore also be considered as stand-alone shelters. Where deployment requires shelters to be located more than 8 meters (26.5 feet) apart, grounding should be accomplished in accordance with Figure l-100 and as follows:

1.11.2.5.2.5.1 Ground Resistance Difference of Less Than 150 Ohms. If ground resistance measurements of all shelters differ by less than 150 ohms, ground each shelter as a stand-alone shelter (reference 1.11.2.3).

1.11.2.5.2.5.2 Ground Resistance Difference of Greater Than 150 Ohms. If differences in ground resistance measurements are 150 ohms or more, take corrective action (reference 1.11.1.3) to reduce resistance, and ground each shelter as a stand-alone shelter (reference 1.11.2.3).

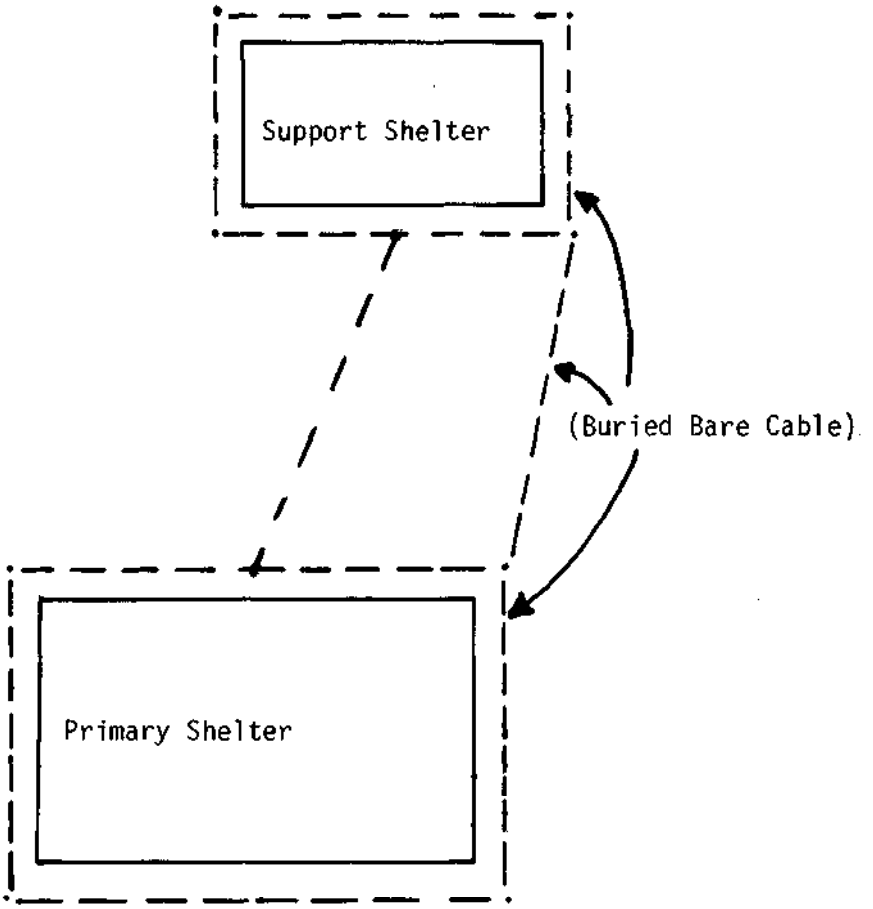

Figure l-100. Connecting Ground Subsystems for Collocated Shelters Greater than 20 Feet Apart

1.11.2.5.2.5.3 Earth Electrode Subsystem. The earth electrode subsystem of each shelter shall be interconnected by two bare copper cables (see Figure l-100). Tie all shelter earth electrode subsystems together to form a common earth electrode subsystem (reference Table l-22 for appropriate size cable to be used).

1.11.2.5.2.5.3.1 Power Ground. All grounded (neutral) conductors of each shelter should be grounded to the earth electrode subsystem via the power entrance panel.

1.11.2.5.2.5.3.2 Signal Ground. The signal reference subsystem (skin or shelter) should be grounded at the earth electrode subsystem at a single point.

1.11.2.5.2.5.3.3 Safety/Equipment Ground (Green Wire). The equipment grounding conductors of each shelter are connected to the ground bus at the power entrance panel which in turn is grounded to the earth electrode subsystem.

1.11.2.5.2.5.3.4 Lightning/EMP Protection. Reference 1.11.2.5.2.4 for this requirement. If additional lightning protection is required, each air terminal with its associated down conductor should be grounded to a ground rod of the earth electrode subsystem. This requirement may necessitate the installation of additional ground rods.

1.11.2.6 Fixed Prefabricated Shelters.

1.11.2.6.1 General Description. Fixed prefabricated shelters are generally designed having the major components prefabricated and then assembled on-site into a fixed shelter which can be considered as a fixed facility. As such, it will have its own earth electrode subsystem (ring ground) meeting the requirements of Section 1.2. It should also have a lightning protection subsystem meeting the requirements of 1.11.1.1.3.1 whenever the shelter is located outside the cone of protection of a higher grounded tower. The shell of metallic prefabricated shelters should be constructed to be electrically continuous and grounded to the earth electrode subsystem to bleed off static charges and reduce the effects of interference to C-E equipments and circuits. If metallic and electrically continuous, the skin of a fixed prefabricated shelter may serve as the equipotential plane. If the skin is not metallic or electrically continuous, a separate equipotential plane meeting the requirements of Section 1.5 will be required.

1.11.2.6.2 Electrical Connection. If the skin of the shelter is metallic, and electrically continuous, it shall be bonded to the grounding (green) cable of the fault protection subsystem at the first service disconnect or the power entrance panel which, in turn, is grounded to the earth electrode subsystem by the shortest route. Both the grounded (neutral) and grounding (green) wires are bonded together inside the first service disconnect, and grounded to the earth electrode subsystem. The grounded wire may, however, be lifted from ground if hum or noise problems are encountered when one power source supplies power to two or more shelters.

1.12 FENCES.

1.12.1 Introduction. Perimeter or security fences designed as part of a facility's ground system shall be constructed of galvanized steel chain-link fencing; vinyl-coating shall not be used. The supporting post and top rails or wire shall be electrically conductive materials. A #6 AWG (minimum) copper conductor, called a reinforcing wire shall be woven through the entire length of the fence. Both the fence post and the fence reinforcing wire shall be grounded periodically to ground rods. A suitable interval for the ground rods is 100 feet for small sites and 500 feet for large sites. Installation will be shown on Figure l-101.

1.12.2 Grounding. Fences should be grounded on each side of every gate and, where crossed by high tension lines, at points 150 feet on each side of high tension crossing. If a fence consists of wooden post and horizontal metal strands only, down conductors should be run the full height of the fence post and securely fastened to each wire so as to be electrically continuous. The connection to the ground may be made at the post, if the post is metal and is electrically continuous with the fence.

1.12.3 Installation. Installation of fence grounds shall be accomplished as follows:

a. Thread a bare conductor, #6 AWG or larger, through individual links of the fence. This must be accomplished by threading two or three links at a time and pulling the conductor through until all slack has been removed; then repeat the process. The copper wire shall be continuous between posts. Splices, if required, shall be made at fence post bonds.

b. Prepare bonding surface in accordance with Section 1.7.2.

c. Bond reinforcing wires at each post with exothermic welds or by brazing.

d. Bond ground straps to fence posts with exothermic welds or by brazing. Bonds to ground rods shall be exothermic welds or clamped and brazed.

e. Seal all bonding surfaces in accordance with Section 1.7.3.

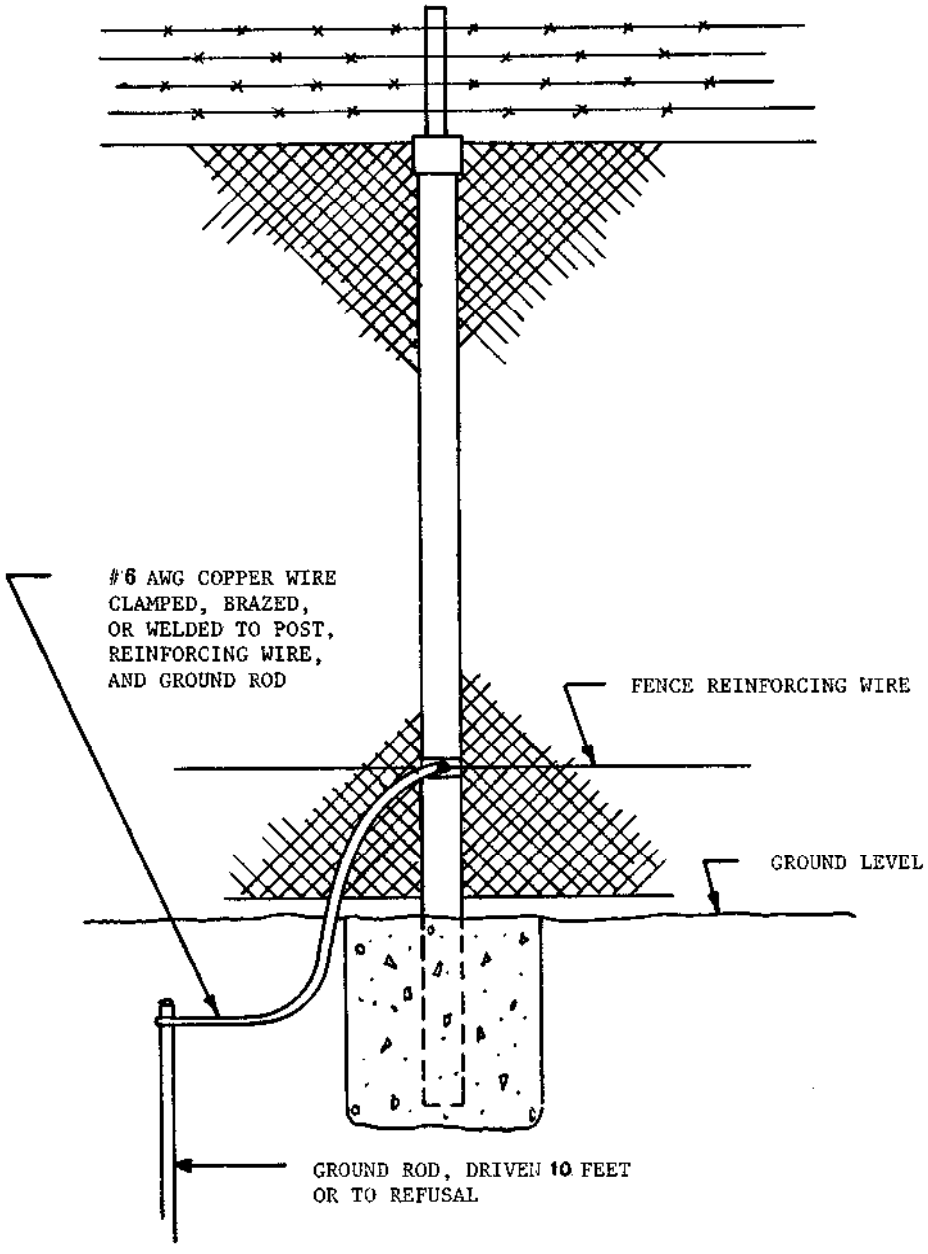

NOTE: GROUND ROD TO BE INSTALLED AT APPROXIMATELY 100-FOOT INTERVALS FOR SMALL SITES AND 500-FOOT INTERVALS FOR LARGE SITES.

Figure l-101. Method of Grounding a Fence

1.13 INSPECTION AND TEST PROCEDURES FOR A NEW FACILITY. The grounding, bonding, and shielding practices and procedures recommended in this chapter should be implemented as integral elements of the facility during the construction of the building or structure. To ensure that the implementation is accomplished in a timely manner, the construction efforts should be carefully monitored from the onset of excavation through completion of the facility. Prior to acceptance of the facility, complete the Facility Checkout Form provided in Section 1.13.6. The following guidelines are provided to aid in the inspection and checkout of the facility.

1.13.1 Earth Electrode Subsystem.

a. Observe installation procedures. Specifically see that the recommendations of Section 1.2.4 are observed. Verify that ground rods conforming to the sizes specified in MIL-STD-188-124A are used. If the ground rods are driven in place, see that driving collars or nuts are used to prevent damage to the rods. Watch for bent and broken or bulged couplings between sections. Seriously weakened or damaged couplings should be replaced before driven below grade.

b. Spot check the resistance of rods as they are driven. Use the fall-of-potential method described in Section 2.2.2.2.1 to determine the resistance of a rod when it reaches the design or specified depth. With the aid of Figures l-4, l-5, and l-6, project the net resistance of the total number of ground rods. This projection should indicate if the planned electrode subsystem will achieve 10 ohms (or less) resistance. As additional rods are driven, continue to spot check the resistance of individual rods by measuring the resistance at each successive fourth or fifth rod. This procedure will permit a decision to be made on the necessity for adjusting the electrode configuration (either adding to or subtracting from) to achieve the required resistance (see Section 1.2.2.3).

c. See that cable interconnecting the rods is of a correct size (1/0 AWG). Inspect all connections between cable sections and all interconnections between cable and ground rods. All connections to be buried and subsequently made inaccessible must be welded or brazed. Restrict the use of clamps or bolted connections to locations which will remain accessible.

d. Check to see that provisions are made for interconnecting the earth electrode subsystem with metal utility lines, buried tanks, and other underground metals.

e. Verify that risers or cables of appropriate size are installed for lightning down conductor, signal ground, and power system ground connections (see Section 1.3.2.2). Ensure that risers used for lightning down conductors are not used as part of the signal reference or fault protection subsystems.

f. Once the complete minimum system is installed, measure the resistance to earth for the system using the fall-of-potential method described in Section 2.2.2.2.1. If the resistance is greater than 10 ohms, alternate methods described in Section 2.9 of Volume I for reducing the resistance-to-earth shall be considered.

g. Insure that all changes or modifications are properly indicated on the facility drawings.

1.13.2 Lightning Protection Network.

a. Determine the cone of protection established by the air terminals (or by the mast or overhead ground wire, if a separately installed system is provided). Locate air terminals on a scaled drawing of the structure (be sure to include all views). Using the procedures of Section 1.3.2.1, determine if all parts of the facility are adequately included within the cones of protection established by the air terminals. In deficient areas, determine what additional measures, if any, need to be taken (Sections 1.3.2.1 and 1.3.2.2 should be consulted for guidance).

b. Inspect air terminals for type of materials (Section 1.3.2.1.1), for correct height (Section 1.3.2.1.2), and proper placement (Section 1.3.2.1).

c. Inspect roof conductors for proper size and correct choice of materials (Tables l-2 and l-3), proper routing (Section 1.3.2.2.1), and for proper use of fasteners (Section 1.3.2.3).

d. Inspect down conductors for proper size and appropriate choice of material (Tables l-2 and l-3). Verify that the routing of down conductors conforms to the recommendations of Section 1.3.2.2.2. Where structural steel members are used as down conductors, the recommendations of Section 1.3.2.2.2.1 should be observed. Inspect fasteners and hardware for accessibility, strength, and corrosion resistance as recommended by Sections 1.3.2.3 and 1.3.3.8.

e. Verify that adequate guards are provided (Section 1.3.3.10).

1.13.3 Signal Reference and Fault Protection Subsystems.

a. Inspect to verify that equipotential planes exist in conformance to Section 1.5.1.1.

b. In steel frame buildings, verify that the equipotential plane is bonded to the main structural steel elements. In wooden or masonry buildings inspect to assure that multiple downleads are bonded to the plane. Insure the red and black signal grounds are bonded to the equipotential plane as outlined in Section 1.6.

c. Verify that the structural steel elements are bonded at the joints to produce a low resistance (< 1 milliohm) joint. Review Section 1.5.1 for recommended fastening procedures. Welded joints conforming to Section 1.7.1 are preferred. Mechanically fastened joints should be carefully cleaned, bolts adequately torqued (see Table l-5), and proper bond protection supplied. Visually inspect cleaning procedures, perform spot checks torque measurements, and visually verify that paints and sealants are applied as needed. Perform spot check measurements of bond resistance at structural joints using the double balanced bridge technique described in Section 2.2.2.3.1. Where bond resistances greater than 1 milliohm are encountered, require that bond surfaces be recleaned, bolts retorqued, or supplemental jumpers provided as needed to achieve 1 milliohm.

d. In non-steel frame or masonry buildings, inspect the installation of the supplemental grounding network for conformance to the recommendations of Section 1.5.1. In particular, verify that the grounding cables provide the required 2,000 circular mils per running foot of conductors.

e. Verify that the ground risers are bonded to the equipotential plane as specified in Section 1.5.1.1 and that the bond resistance does not exceed 1 milliohm. Inspect to assure that the ground risers are located to provide the shortest possible lengths to the equipotential plane.

f. Verify that at least two electrical paths exist between the equipotential plane and the earth electrode subsystem. Preferably the plane should be bonded to the building main structural steel (or downleads in wooden buildings) at least every 3 meters (10 feet). Measure the resistance between selected points on the plane and the earth electrode subsystem to verify that the total resistance does not exceed 5 milliohms. If the resistance does exceed 5 milliohms check all joints for proper bonding and down hauls for proper sizes. See that all deficient conductors are replaced and that all poor bonds are redone.

g. Inspect all conduit metallic pipes and tubes for continuity and bonding as recommended in Section 1.4.4.

h. Verify that all electrical supporting structures and cable ways are interconnected and bonded as recommended in Section 1.4.5.

i. Inspect the grounding of the electrical distribution system for conformance with Section 1.4.6.

1.13.4 Bonds and Bonding.

a. In addition to the inspection of structural joints, generally inspect all bonds for proper cleaning, correct fastening or assembly, and for adequate corrosion protection. Be particularly alert for conformance with the recommendations of Sections 1.7.1 and 1.7.3.

b. Perform resistance checks on selected bonds. Use the double balanced bridge method described in Section 2.2.2.3.1. All bonds should exhibit a resistance of 1 milliohm or less; those which do not must be redone.

PART I - EARTH ELECTRODE SUBSYSTEM

1.13.5 Facility Checkout Form.

Facility _____ Date _____

Location _____ Inspector _____

A. Soil Resistivity _____ (ohm-cm).

(Obtain from site survey (see Section 1.2.1.1) or from the measured resistance of a rod or group of rods (see Section 1.13.1). Use Figures l-4, l-5, and l-6 to obtain an estimate of the average resistivity.)

B. Resistance of Completed Earth Electrode Subsystem:_____ ohms.

C. Sketch of Final Earth Electrode Subsystem:

(Show dimensions, locations of other buried metal objects, risers for lightning, power, or signal ground connections, and any ground wells.)

(Corrected engineering drawings may be attached in lieu of sketch.)

D. Inspection Check List (Initial when completed or confirmed):

Ground rod sizes as specified _____

1/0 AWG (or as specified) cable used _____

Risers placed as specified _____

All connections to buried metal objects made _____

All future inaccessible joints and connections welded or brazed _____

Ground wells provided as specified _____

PART II - LIGHTNING PROTECTION NETWORK

A. Cone of Protection:

(Attach profile views of facility (including antennas) with cone of protection added - see Section 1.3.2.1.2)

B. UL Master Label Obtained (If Required)?

Yes _____ Not Required _____

C. Drawings:

(Attach all drawings pertaining to the lightning protection system or indicate where they may be found.)

D. Inspection Checklist:

	As Specified	Comments
Air Terminals		
Materials	_____	_____
Height	_____	_____
Placement	_____	_____
Roof Conductors		
Size	_____	_____
Materials	_____	_____
Routing	_____	_____
Down Conductors		
Size	_____	_____
Materials	_____	_____
Routing	_____	_____

PART II - LIGHTNING PROTECTION NETWORK (Continued)

Fasteners & Hardware

Materials _____ _____

Mounting _____ _____

Guards _____ _____

PART III - FACILITY GROUND SYSTEM

A. Steel Frame Buildings:

Inspect structural joints for correct bonding - see Part IV below.

B. Non-Steel Frame Buildings:

	As Specified	Comments
Supplemental Grounding Network:		
Cable Sizes	_____	_____
Facility Ground Plates:		
Size	_____	_____
Location	_____	_____
Resistance Measurements:		
Number	_____	
Lower Limit	_____	
Upper Limit	_____	

PART IV - BONDING

A. Procedures:

	As Specified	Comments
Cleaning	_____	_____
Fastening	_____	_____
Protection	_____	_____

B. Torque Tests:

Number Made _____

Check here _____ when all bonds meet the torque requirements of Table l-23.

C. Resistance Tests:

Number Made _____

Lower Resistance Limit _____ milliohms

Upper Resistance Limit _____ milliohms

(Follow the procedures set forth in Section 1.13.3 for any bonds exhibiting a resistance greater than 1 milliohm.)

1.14 REFERENCES.

l-l. L. E. Whitehead, “Nomograph Determines Ground Rod Resistance,” Electric Light and Power, December 1962.

l-2. C. H. Jensen, “Grounding for Substations,” Electrical South, Oct/Nov 1960.

1-3. "Master Labeled Lightning Protection Systems," UL 96A, Underwriters Laboratories, Inc, Chicago IL, June 1963.

1-4. P. F. Offerman, “Lightning Protection of Structures,” IEEE Conference Record of the 4th Annual Meeting of the Industrial and General Applications Group, Detroit MI, 12-16 October 1969, pp 365-370.

l-5. "The Protection of Structures Against Lightning," British Standard Code of Practice, CP 326:1965, British Standards Institution, British Standards House, 2 Park Street, London. Also available through American National Standards Institute (ANSI).

l-6. National Electrical Code, NFPA No. 70, 1987 (ANSI Cl), National Fire Protection Association, Batterymarch Park, Quincy MA 02269.

l-7. “Specification for the Design, Fabrication, and Erection of Structural Steel for Buildings,” American Institute of Steel Construction, NY, NY.

l-8. R. E. Taylor, “Radio Frequency Interference Handbook,” NASA-SP-3067, National Aeronautics and Space Administration, Washington DC, 1971, N72-11153-156.

l-9. “Chemical Conversion Coatings on Aluminum and Aluminum Alloys,” Military Specification MIL-C-5541B(2), 30 November 1972.

l-10. "Tin Plating, Electrodeposited on Hot-dipped, for Ferrous and Nonferrous Metals," Military Specification MIL-T-10727B, 2 April 1980.

l-11. “Cleaning Method and Pretreatment of Ferrous Surfaces for Organic Coatings,” Federal Specification TT-C-490B, 21 July 1971.

1-12. S. Mir and D. R. J. White, “Building Attenuation and the Impact on Product Susceptibility,” 1974 IEEE Electromagnetic Compatibility Symposium Record, 74CH0803-7 EMC, San Francisco CA, 16-18 July 1974, 76-84.

1-13. E. R. UhIig, “Development of Criteria for Protection of NIKE-X Power Plant and Facilities Electrical Systems against Nuclear Electromagnetic Pulse Effects,” Report No. 67UO5, General Electric Company, Pittsfield MA, March 1967, AD 811 072L.

1-14. “EMP Protection for Emergency Operating Centers,” TR-61A, Defense Civil Preparedness Agency, Washington, DC, July 1972.

1-15. H. Lamb, "On the Reflection and Transmission of Electrical Waves by a Metallic Grating," Proceedings of the London Mathematical Society, Vol 29, pp 523-544, 1898.

1-16. "Architectural Interference Data," RADC TR-63-312, Contract AF 30(602)-2691, White Electro-magnet&, Inc, Bethesda MD, 20 August 1963.

1-17. R. B. CowdelI, "Simplified Shielding," 1967 IEEE EMC Symposium Record, Washington DC, pp 399-412.

1-18. A. P. Hale, "EM Shielding," 1973 IEEE EMC Symposium Record, New York NY, pp 330-339.

1-19. R. B. Shultz, "ELF and VLF Shielding Effectiveness of High Permeability Materials," IEEE Transactions on Electromagnetic Compatibility, Vol EMC-10, No. 1, March 1968, pp 95-100.

l-20. Not previously published. Data courtesy of Mr Dwayne Awerkamp, Motorola, Inc, Tempe AZ.

CHAPTER 2

EXISTING FACILITIES (Not Protected Against EMP)

2.1 INTRODUCTION. This chapter presents steps and procedures for verifying, upgrading, and evaluating the grounding, bonding, and shielding networks in an existing facility not protected against EMP. The specific items to consider during the evaluation of the facility are identified in Section 2.2 with a suggested survey form provided in Section 2.2.2.4. In addition, inspection procedures are given in Section 2.3. These procedures are directed toward verifying that the grounding, bonding, and shielding networks have not been compromised, that the basic resistance goals continue to be met, and that corrosion is effectively controlled.

2.2 UPGRADING.

For an existing facility with electrical wiring already installed, with an earth electrode subsystem (frequently only a connection to the water system) present, and (commonly) with electrical/electronic equipments in place, the installation of the grounding, bonding, and shielding networks described in Chapter 1 may not be straightforward. In recognition that major retrofitting, with the attendant costs and operational disruption, may be required in order for the facility to conform to the recommended practices and procedures, it is necessary that a comprehensive grounding, bonding, shielding, and lightning protection survey be made of the entire facility. The findings of the survey should be entered on the Survey Form. The results should be critically analyzed to determine the extent to which the existing system fails to conform to the recommendations set forth in Chapter 1. In areas of nonconformance, the performance history of equipments and subsystems in the facility should be examined to establish, if possible, any relationships which exist between noted deficiencies and operational problems. Then the decision to retrofit and the extent of any such retrofitting can be made based on the relative need to improve and on the overall cost of the retrofit. Figures 2-l and 2-2 are typical for building expansion.

Before upgrading, altering, or expanding the grounding, bonding, or the shielding of a facility, it is necessary to define and analyze the existing system. This definition and analysis should include as a minimum the following steps:

a. Obtain or prepare an accurate and complete set of drawings to show what is initially in the facility.

b. Determine the condition, integrity, and effectiveness of the grounding, bonding, and shielding systems as they exist before changes are made. This determination will usually consist of a combination of visual inspections, analyses of facility drawings, and electrical measurements.

c. Comprehensively document the findings of steps a and b and maintain for future reference.

d. Compare the findings with the facility requirements to determine if improvements are needed.

Once the need for changes or improvements in the system is determined, take whatever action is needed to rectify the deficiencies noted during the survey.

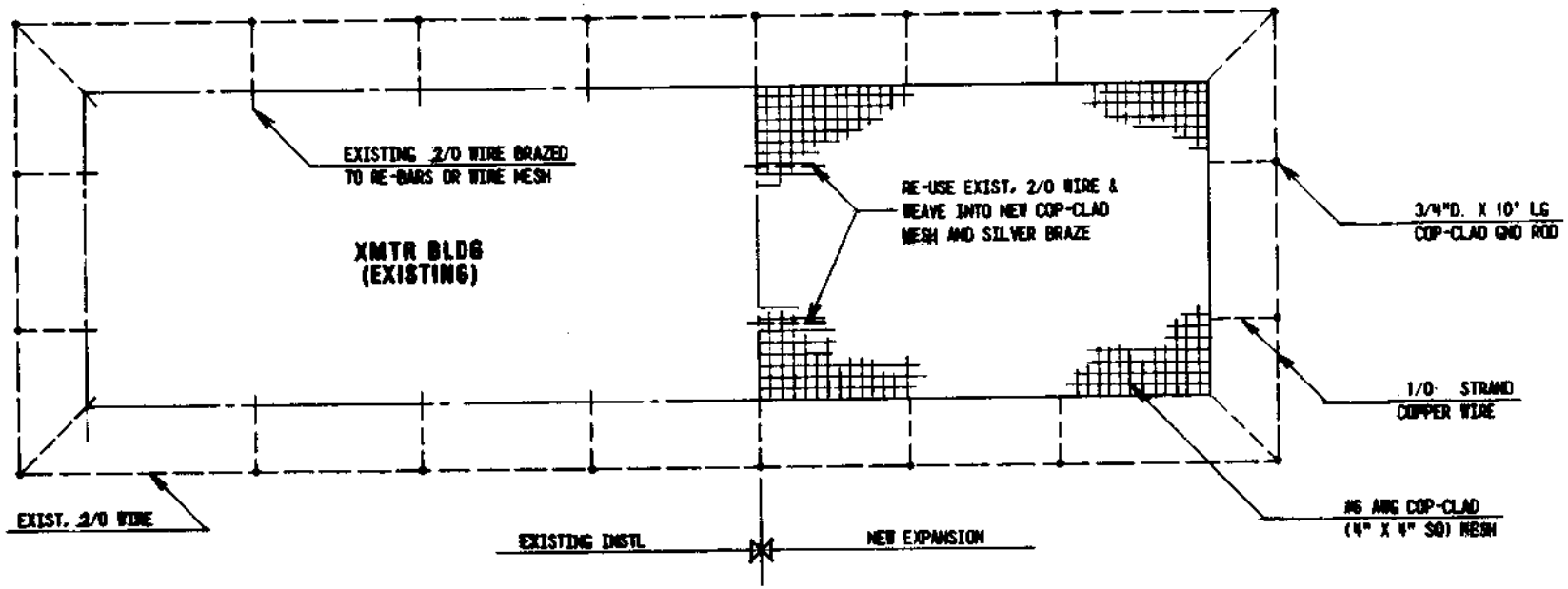

XMTR BLDG EXPANSION

Figure 2-1. Transmitter Building

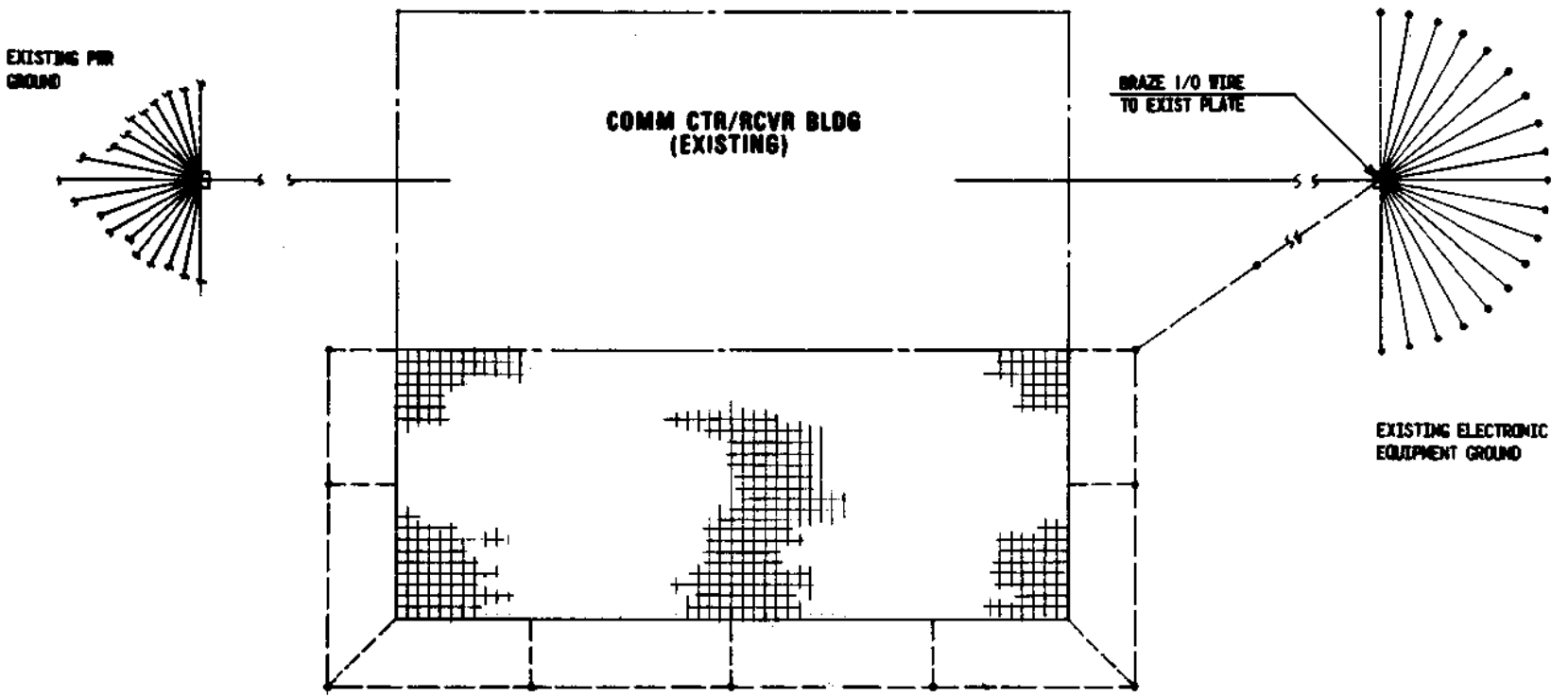

Figure 2-2. Communication Center/Receiver Building Expansion

2.2.1 Drawings. Obtain, prepare, or complete an accurate set of architectural and engineering drawings for the facility to include all structures associated with it. Of particular importance are the site layout drawings which show the configuration of the earth electrode subsystem, location of utility piping and cable systems, general landscape features and building profile drawings. Structural drawings show methods of connecting to the earth electrode subsystem, methods used for structural steel assembly, locations and methods for the installation of reinforcing steel as well as metal screens or sheets. Electrical diagrams and drawings generally show wire sizes, breaker sizes, as well as cable type, routing and enclosures utilized. Drawings of the lightning protection subsystem show heights and locations of air terminals, down conductor sizes and routing, fasteners, guards, and connections to the earth electrode subsystem. Once the drawings are obtained, compare them with the existing structure and update them as needed to reflect additions or modifications which have been made but not entered on the drawings. If new drawings must be prepared, be sure they include all elements of the structure. It is very important that an accurate representation of the existing configuration be on hand before attempting any decision pertaining to upgrading or retrofitting the facility.

2.2.2 Facility Survey. After the drawings are obtained or prepared, conduct a comprehensive survey of the grounding, bonding, shielding, and lightning protection practices throughout the facility. This survey should cover all the major elements of the fault protection subsystem, signal reference subsystem, bonding (both in current paths and between structural elements), lightning protection for the structure, shielding for both EMI (and EMP, if required) and personnel protection. Visual observations should be concisely documented and related to the engineering drawings for the facility. Measurements performed along with results obtained should be accurately documented on the Grounding, Bonding, and Shielding Form of Section 2.2.2.4.

2.2.2.1 Survey Steps. The steps associated with the facility survey are:

a. Analyze the earth electrode subsystem and measure its resistance to earth.

b. Inspect a representative number (5 to 10 percent) of the bonds throughout the facility.

c. Inspect and evaluate the lightning protection subsystem.

d. Inspect the fault protection subsystem, make spot checks of stray current levels.

e. Map out and describe the signal grounding networks (or systems) present in the facility.

f. Perform a ground system noise survey.

g. Evaluate (if applicable) the electromagnetic shielding of (or in) the facility.

h. Before leaving the facility, review the Survey Form for accuracy and completeness.

2.2.2.2 Inspection Procedure.

The procedure outlined below follows the same order as the Survey Form. In some facilities, a different ordering of the steps may be appropriate; in large facilities, more than one of the areas may be examined simultaneously. The most important task is not the sequential ordering of the steps, it is rather the accurate and comprehensive conduct of the survey.

Before beginning the survey, enter the name and description of the facility (or the specific building, structure, or subsystem being surveyed), its location to include sufficient information to identify the geographical area, the date of the inspection, and the name of surveyor or survey team leader at the top of the Form.

2.2.2.2.1 Earth Electrode Subsystem.

a. Determine the configuration of the earth electrode subsystem for the facility. Sketch the conductor layout in the space provided in Part I, Section C of the Form or on an attached sheet. Engineering drawings may be attached in lieu of the sketch. Corrections or additions should be made to the drawings as appropriate. Identify the type of earth electrode subsystem present, i.e., rods, ring ground, grid, grid with rods, plates, horizontal radials, utility pipes, etc. Note all interconnections between the earth electrode subsystem and other conductors such as water pipes, buried tanks, structural columns, underground guard cables, antenna counterpoises, and power grounds.

b. To the extent that information is available, determine the composition (copper, copperclad steel, steel, solid, hollow, etc.), diameter, and length of ground rods, as well as the size, depth, and composition of the ring ground. If horizontal rods or ribbons are used, record the dimensions; likewise, record the physical dimensions and composition of plates, cylinders, or other types of electrodes.

c. Examine the conductor or conductors used to ground the power system neutral in the first service disconnecting means (i.e., main power switch or breaker for the facility), the power transformers, or other elements of the power distribution system to the earth electrode subsystem. Record the size or sizes in Section B, Part I, of the Form. Using a clamp-on ammeter, measure the ac current in each of these conductors and record in Part IV, Section C.

d. Inspect those bonds associated with the earth electrode subsystem carefully for evidence of looseness, corrosion, electrolysis, and lightning or mechanical damage. (For a more detailed discussion of bond inspection procedures, see Section 2.2.2.2.2.) Note specific deficiencies in the appropriate blanks in Part II of the Form.

e. Make a general classification of the type of soil at the site. If the site possesses unique properties (e.g., located on a mountain top, in a swamp, on a coral reef), appropriately indicate the unusual features. Also generally describe the weather conditions existing at the time of the survey, particularly if the earth resistance measurement described in the next step is performed. If known, indicate how recently rainfall totaling at least 0.01 inch has occurred. Enter the site and weather description in Sections D and F of Part I. Also state if any soil treatment or enhancement procedures have been utilized.

f. Measure the resistance to earth of the earth electrode subsystem using the fall-of-potential method. (For a detailed description of the principles of this technique see Volume I, Section 2.7.2.)

(1) Connect the terminals marked C_1 and P_1 of the test set together and connect them to the electrode under test.

(2) Determine the maximum dimension of the earth electrode subsystem. For a circle, this dimension is the diameter; for a square or rectangle, the dimension is along the corner-to-corner diagonal; for other shapes, select the longest lateral distance across the system. Locate the current probe, C_2, of the earth tester, at a distance equal to or greater than five times the longest dimension from the point of connection to the electrode under test. Earth testers are typically supplied with approximately 30 meters (100 feet) of interconnecting wire. For all but the simplest earth electrode subsystem, 30 meters (100 feet) is insufficient spacing of probe C_2. The 30-meter (100-foot) spacing may be used for one- or two-rod systems where the rods are not more than 6 meters (20 feet) long nor spaced more than 6 meters (20 feet) apart. Thus, in most cases, additional wire will be needed for connecting the test instrument to the C_2 probe and the the potential probe, P_2. For distances up to 300 meters (1000 feet), insulated No. 16 AWG or No. 18 AWG wire may be used.

(3) Position the C_2 probe along a line which maximizes the distance from the electrode under test and from other buried metals such as utility pipes, power and signal cables, fuel tanks, sewers, etc. In choosing the direction for placement of the C_2 probe, examine the configuration of the earth electrode subsystem for the facility and determine the location of all such buried metals. Then locate the probe as far as possible from all these metals as illustrated in Figure 2-3.

(4) Next position the potential probe P_2 along a straight line between the C_2 probe and the point of connection to the electrode under test. Insert both P_2 and C_2 probes into the soil to a depth of between 10 cm (4 inches) and 30 cm (12 inches). (In the event that the probes supplied with the tester by the manufacturer are not available, make a set of probes following the instructions given in Chapter 1, Section 1.2.1.1.) Take the first resistance reading, following the instructions supplied with the tester, with probe P_2 located about 20 percent of the distance X between the electrode and C_2 Repeat the measurement at the 0.4, 0.5, 0.6, 0.7, 0.8, and 0.9X points. Record the C_2 distance and the resistance measured at each P_2 location on the worksheet shown in Figure 2-4. (Figure 2-5 is an example of a typical worksheet that has been completed.)

(5) The resistance of 0.5X and 0.7X should be within 10 percent of the value at 0.6X. If these readings do not fall within 10 percent of the reading at 0.6X, either measure along a line in a different direction or move the position of C_2 farther away from the electrode under test. If locating C_2 equal to greater than five times the largest dimension is impractical, perform a series of tests for at least five C_2 locations out to the maximum practical distance. The resistance of the subsystem must then be determined graphically, using the method for extensive electrode subsystems described in Volume I, Section 2.7.2.2. (An illustrative example is also shown in that section.)

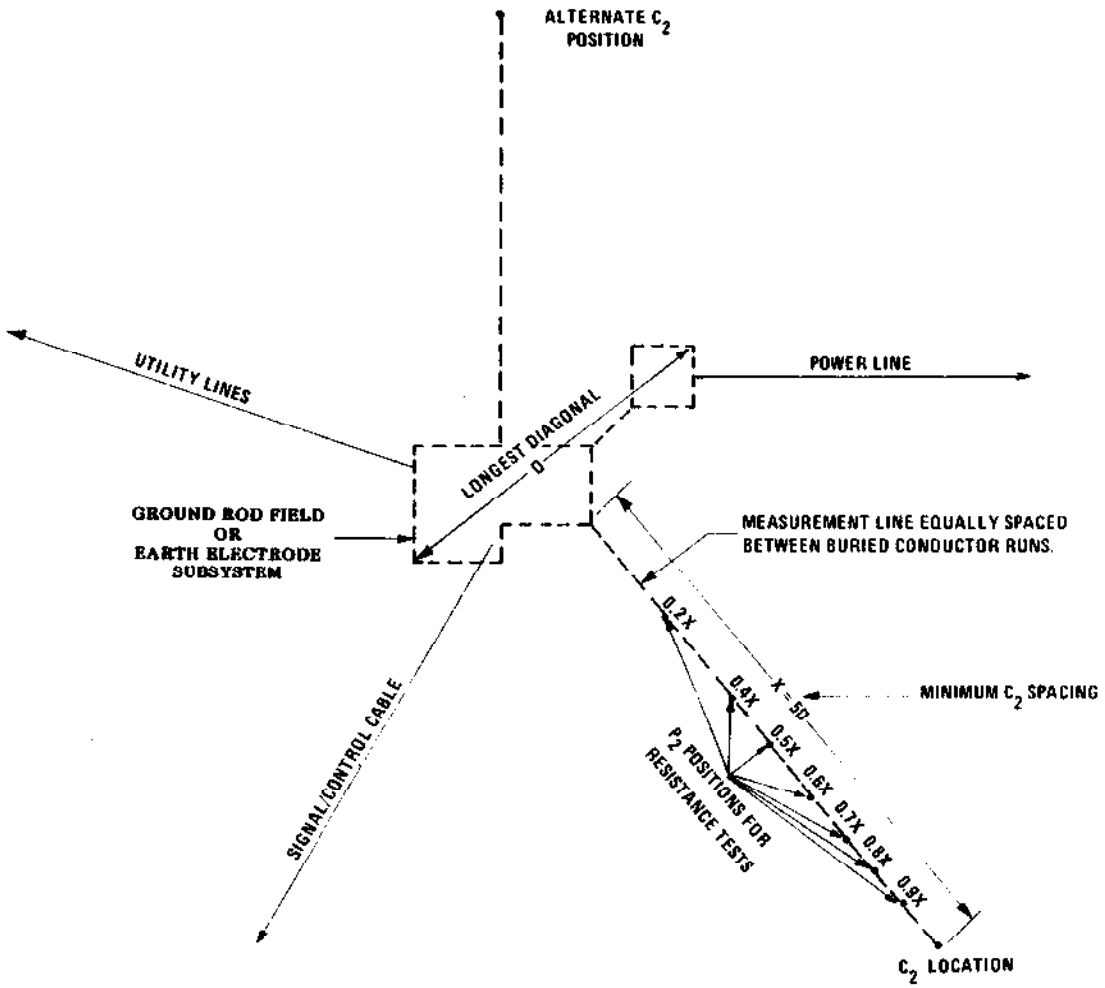

Figure 2-3. Earth Resistance Measurement at a Typical Facility

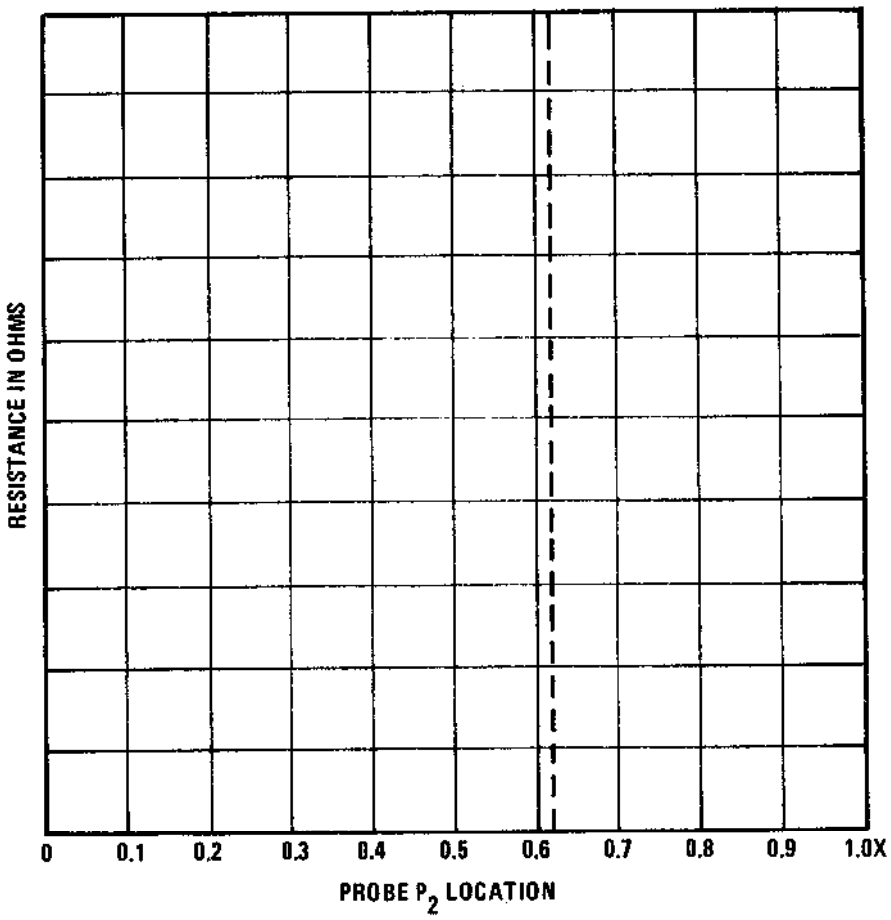

LOCATION _____

$C_1 P_1 - C_2$ DISTANCE, X _____ (FT)

POSITION	DISTANCE IN FT	RESISTANCE IN OHMS
0.2X		
0.4X		
0.5X		
0.6X		
0.7X		
0.8X		
0.9X		

RESISTANCE AT 0.62X _____ (Ω)

Figure 2-4. Resistance Measurement Work Sheet

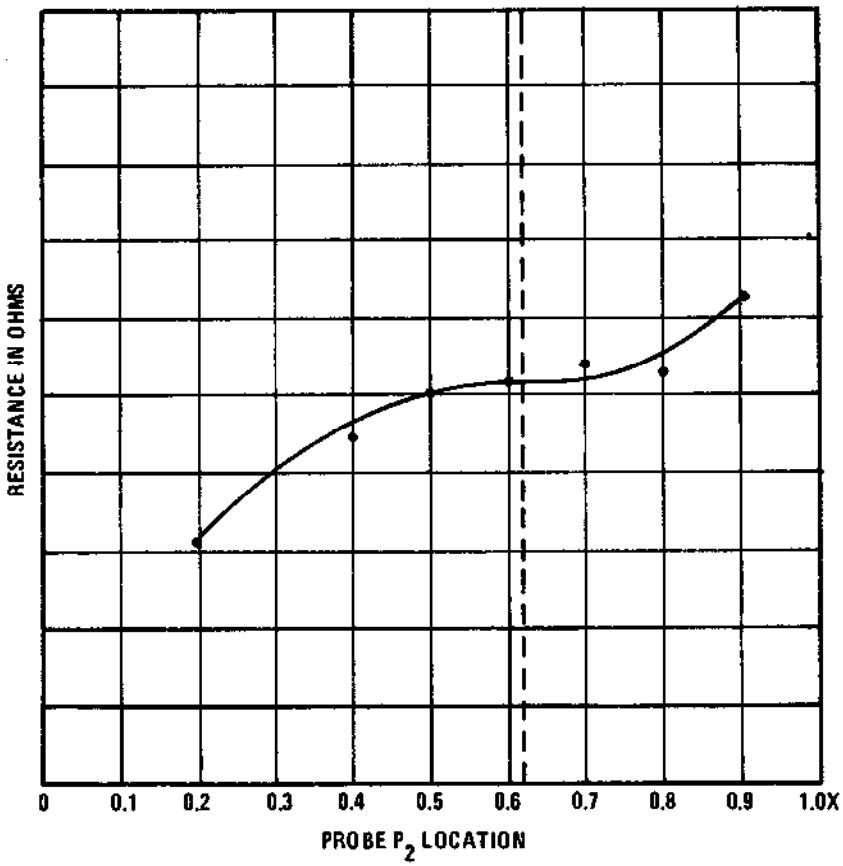

EARTH RESISTANCE

LOCATION *Transformer No. 1*

$C_1 P_1 - C_2$ DISTANCE, X *130* (FT)

POSITION	DISTANCE IN FT	RESISTANCE IN OHMS
0.2X	26	3.2
0.4X	52	4.5
0.5X	65	5.1
0.6X	78	5.2
0.7X	91	5.4
0.8X	104	5.3
0.9X	117	6.3

RESISTANCE AT 0.62X *5.3* (Ω)

Figure 2-5. Sample of a Completed Resistance Measurement Work Sheet

2.2.2.2.2 Bonds and Bonding.

a. Visually check a representative number (5 to 10 percent) of the various types of bonds in use throughout the facility. An examination of one bond is not sufficient; it will not normally be necessary, however, to examine every joint in the facility. Typical bond deficiencies to look for are illustrated in Figures 2-6 and 2-7. Other things to look for are:

(1) Welded, brazed, or silver soldered connections should be examined for broken or cracked seams, presence of voids, size of filler deposit (see Section 1.8.1), length and number of deposits (if discontinuous), and evidence of corrosion.

(2) Soft soldered bonds should be inspected for broken connections, evidence of cold solder joints (crystalline, grainy appearance), and signs of overheating. Soft solder should only be used to improve conductivity at load bearing joints; it should not be required to provide mechanical restraint. There shall be no solder joints in either the fault protection subsystem (this includes the green wire network) or in the lightning protection subsystem.

(3) Bolted joints should be checked for looseness, inadequately sized fasteners, corrosion of either the fastener or main member, improper use of washers and locknuts, absence of or inadequate coverage with protective coatings, damaged or missing hardware, and improperly cleaned mating surfaces. Be particularly thorough in the inspection of bolted connections in areas open or exposed to the weather.

(4) Joints using rivets, clamps, and other type fasteners should generally be examined for looseness and corrosion.

b. Note the location and nature of specific bond deficiencies in Section B, Part II, of the Survey Form.

c. Concurrently with or following the visual inspection of the bonds, perform bond resistance measurements using the test procedure described in Section 2.2.2.3.1. Select five to ten bonds that visually appear tight, well made, and corrosion free and measure their resistances. The sampling should include structural bonds, equipment-to-structure bonds, connections between safety ground wires, conduit-to-conduit or conduit-to-cabinet joints, bonds in lightning down conductors (to include structural columns if used for lightning discharge paths), and others as appropriate. Also measure all bonds exhibiting visible defects. These measurements indicate the actual resistance between the two measurement points and also include the effects of any paths in parallel with the bond under test.

d. For every bond exhibiting a resistance greater than one milliohm, check for looseness; if the connection is loose, tighten the fastener. Measure the resistance again after tightening. If the resistance is still greater than one milliohm and the joint can be readily disassembled, disassemble the joint and check for corrosion, debris, paint, or other nonconductive materials. Remove the material, reassemble the bond, and remeasure the resistance. If the resistance is still greater than one milliohm, note on the Survey Form the location of the bond and indicate the type of corrective action needed.

e. Bonding jumpers using wires, cables, or wide metal straps are frequently used for fault grounding, signal grounding, and lightning grounding. Fault protection jumpers should conform to Article 250 of the NEC. If they do not conform to Article 250, the jumpers should be replaced with cables or straps of the sizes specified by the NEC. Signal grounding straps should be only as long as needed to bridge the physical distance and should exhibit a length to width ratio of not greater than 5 to 1. Lightning bonds should be restricted to not more than 1.8 meters (6 feet) and should only be used to interconnect lightning down conductors to nearby

metallic objects. In addition to these requirements, examine the end connections at the end of the straps or jumpers for looseness, corrosion, and mechanical damage as described above. Any bond jumper not conforming to these requirements should be documented in Section D, Part II, of the Survey Form. Note the specific location and indicate the type of corrective action needed.

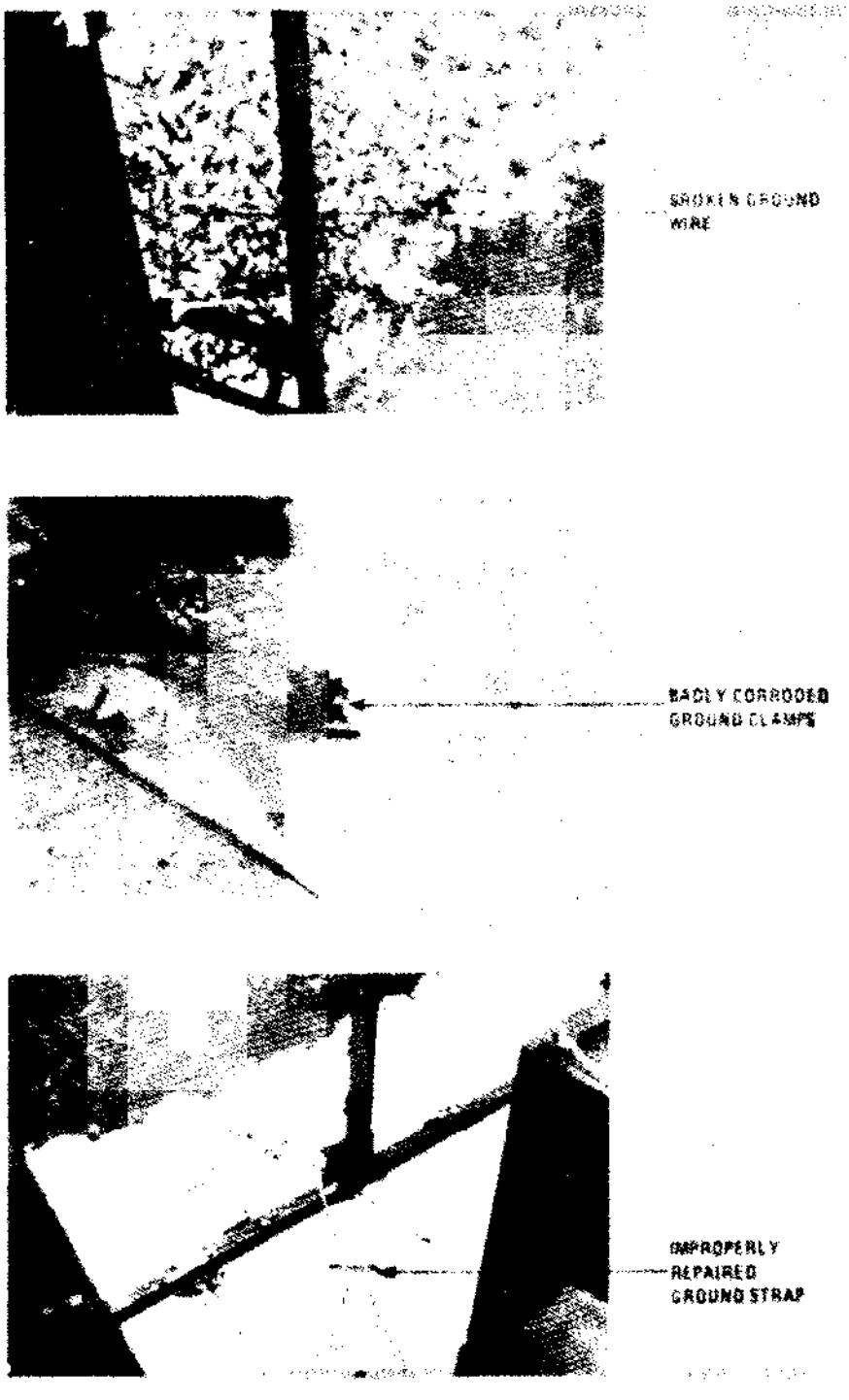

Figure 2-6. Typical Bonding Deficiencies

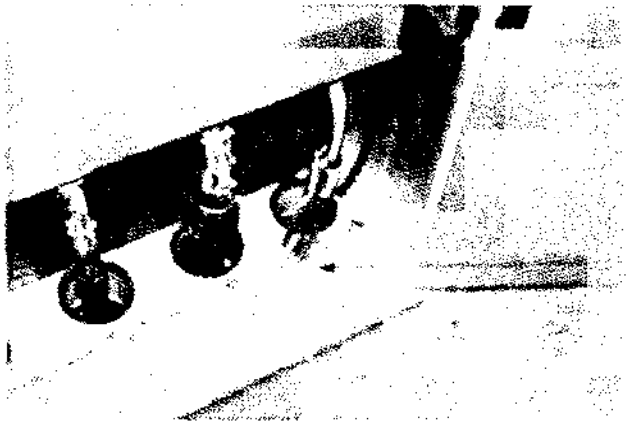

EXCESSIVELY LONG SHIELD PIGTAILS

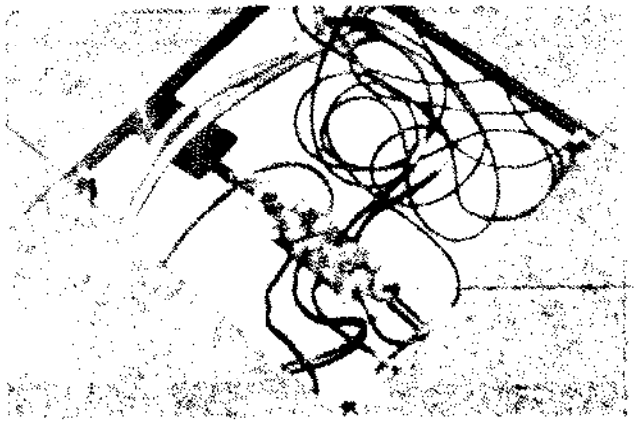

CORROSION AT GROUND CABLE CONNECTION TO GROUND PLATE

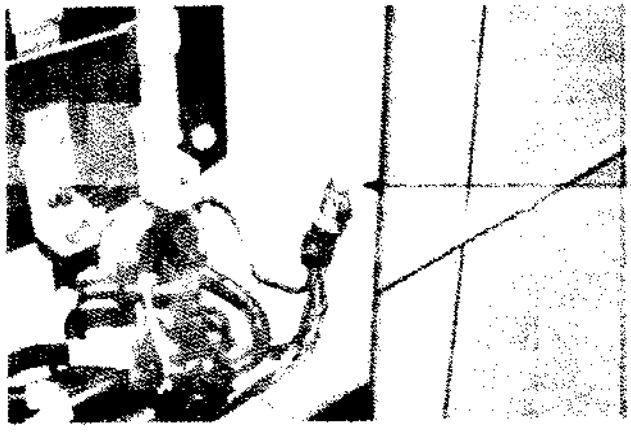

MAKE SURE THAT PAINTS AND OTHER INSULATING MATERIAL REMOVED PRIOR TO ATTACHMENT OF GROUND CONNECTIONS

Figure 2-7. Typical Bonding Deficiencies

2.2.2.2.3 Lightning Protection Network.

a. First, make a sketch of the lightning protection network for the facility or compare the system as installed with the engineering drawings.

(1) The sketch should include profile views of the facility's exterior either drawn approximately to scale or dimensions indicated on the views to permit scaled drawings to be made later. On the sketch, indicate the location of air terminals (lightning rods), the routing of roof and down conductors, connections to the earth electrode subsystem, and the location and size of bonding jumpers. Are the air terminals located and installed in such a manner so as to provide adequate protection (1:1 cone of protection) for all C-E buildings, structures, antennas, and equipments?

(2) In most cases, engineering drawings should be available. If not shown already, add elements of the lightning protection subsystem to the drawings.

b. Some large existing facilities may have a UL Master Labeled System installed. If such a system exists, indicate this fact in Section B, Part III of the Form.

c. In Section C, Part III, of the Form, record the height (above the roof) and material of the air terminals. Look for evidence of burning, pitting, or melting of a degree that seriously weakens (physically) the air terminals. While inspecting the air terminals, be alert for other metallic extensions (railings, antenna masts, etc.) extending above the air terminals or outside the cone of protection and note the existence of any such extensions on the Form.

d. Record the cable sizes and materials used for roof and down conductors. Examine both types of conductors for unnecessary length, sharp or unnecessary turns (radii less than 20 cm (8 inches)), corrosion, and mechanical damage.

e. Check fasteners and mounting hardware for secure mounting, looseness, corrosion, and mechanical damage. Verify that fasteners for connecting dissimilar metals (e.g., copper to aluminum) are of UL-approved bimetallic construction. Record any noted deficiencies in Section F, Part III, of the Form.

f. Be sure that the bonds and bonding inspection (Section 2.2.2.2.2) includes the lightning protection subsystem.

g . Insure that interconnections between the lightning protection subsystem and the earth electrode subsystem, structural metals, utility lines, etc., are recorded or noted on the sketch prepared earlier or are shown on the facility drawings.

h. Check for the adequacy of guards which provide mechanical protection for down conductors (see Figure 2-8). Note any down conductors in areas with public access or subject to contact by equipment or machinery. All such down conductors must be guarded with- metallic or nonmetallic (preferably) guards to a height of at least 2.7 meters (9 feet) from grade or floor level. Such guards must be securely fastened in place and not show appreciable physical degradation. Metal guards to include EMT and conduit must be bonded to the down conductor at the top and bottom. Record all noted deficiencies in Section H, Part III.

Figure 2-8. Severely Damaged Down Conductor

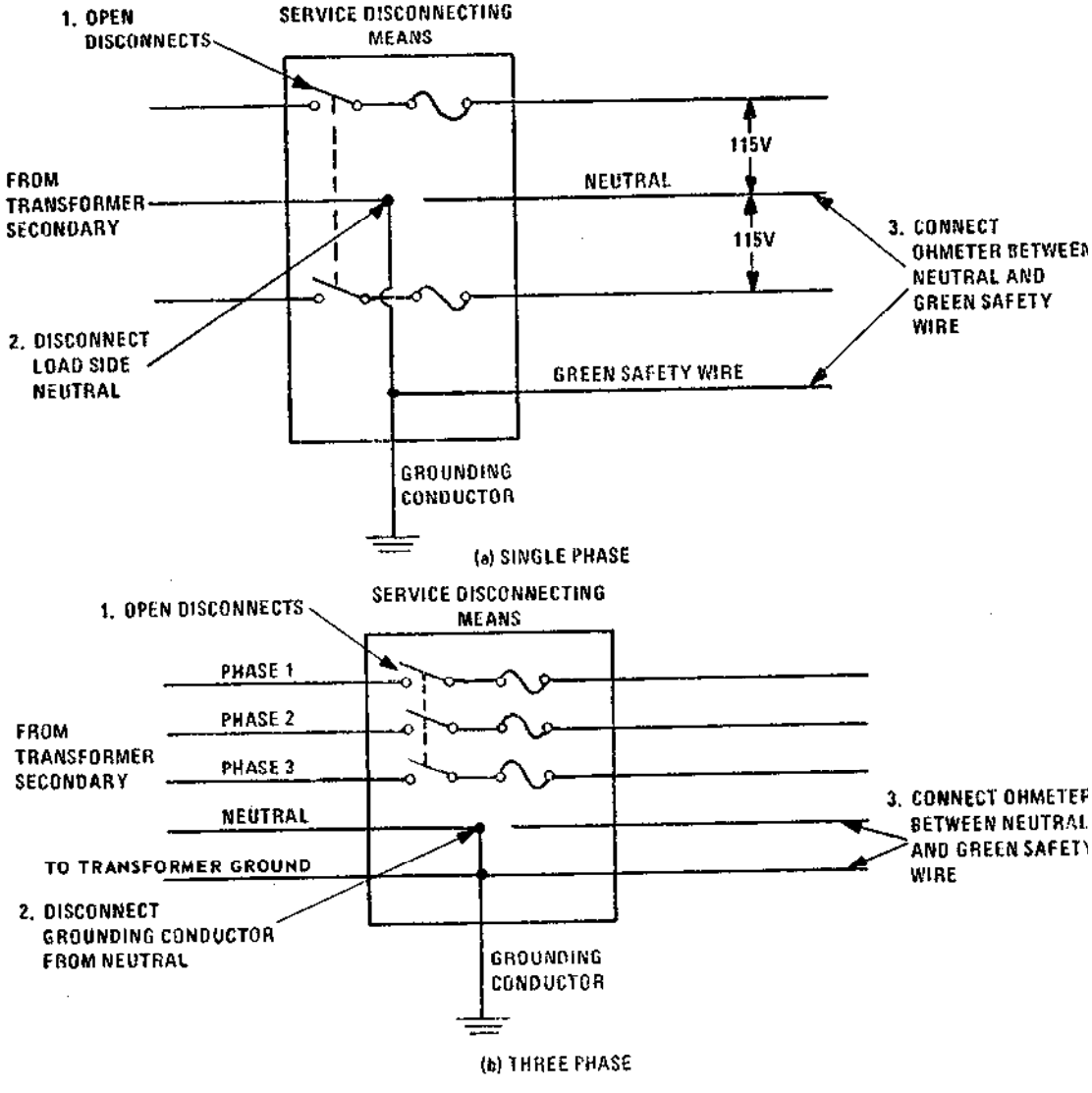

Figure 2-9. Method for Determining the Existence of Improper Neutral Ground Connections

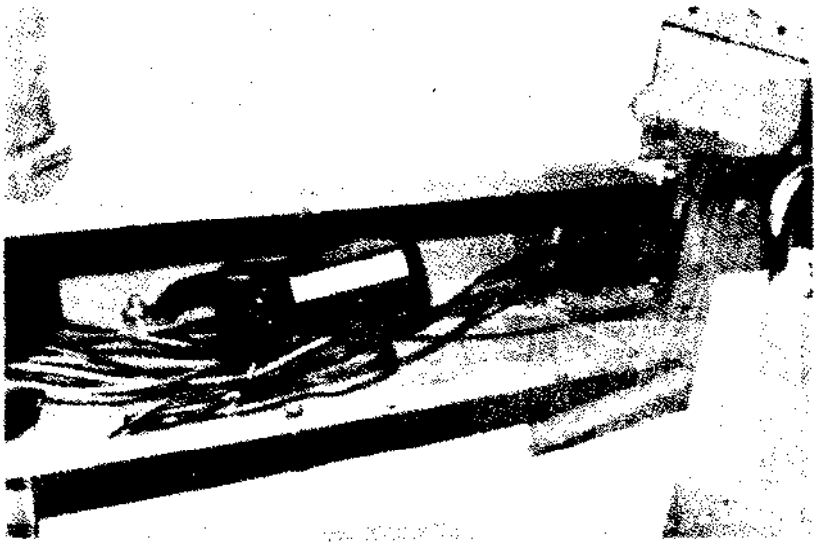

Figure 2-10. Measurement of Stray Current Level in Safety Ground Conductor

2.2.2.2.4 Safety Grounding.

a. Inspect the fault protection subsystem for conformance with the requirements of MIL-STD-188-124A and the National Electrical Code. Specifically, all equipments supplied with electric power and other electrical apparatus falling within the jurisdiction of the Standard or the NEC, must be grounded in accordance with the Standard or the Code. Inspect the facility and the equipment associated with the facility to see that grounding (green) conductors are present and record the sizes of the conductors. See that all connections are tight and well made. Record the other information requested about the fault protection subsystem in Part IV of the Survey Form.

b. Check to see that color continuity is maintained from the breaker panels to the equipment. In particular, be alert for white wire/green wire reversals.

c. Make sure that the neutral white wire (or other designated conductor) is not grounded at intermediate distribution panels, at switch boxes, or inside equipments. The grounded conductor shall be bonded to the earth electrode subsystem only at the first service disconnecting means. Facilities which can be temporarily removed from service should be deenergized and the main power switch locked or otherwise secured open. With electrical power removed, disconnect the neutral from ground at the first service disconnecting means and check for continuity between the neutral and the grounding conductor (see Figure 2-9). A low resistance reading (< 10 ohms) indicates that the neutral is connected to ground somewhere other than at the first service disconnect, This ground connection must be located and removed. Under normal operation, a one megohm resistance should easily be attained.

d. Using a clamp-on ammeter measure the stray current levels (see Figure 2-10) in the safety ground network at selected points throughout the facility. Choose a sufficient number of points to give an indication of the relative stray current level in the facility. In facilities containing electronic equipments, record and take action to correct all levels greater than 0.1 ampere. Enter results of measurements in Section C, Part IV, and see Section 2.2.3, which follows, for suggested steps for reducing these stray current levels.

2.2.2.2.5 Signal Grounding Practices.

a. Prepare a general description of the methods, techniques, and practices of signal grounding in the facility (see Sections 1.5 and 5.3.2 of Vol I). Determine if an identifiable, dedicated signal grounding network is present. Note the equipments served by the network. Include the description of this network in Section A, Part V of the Form. In Section B, record the location and size of wires or buses used as signal conductors. Also determine the existence of an equipotential plane.

b. Using a double balanced bridge or a four-terminal milliohmmeter, measure the resistance (see Section 2.2.2.3.1) between selected points of the signal ground network. Where lower frequency ground networks exist, measure the resistance between those points on the network where equipment interconnections are made. On Figure 2-11, typical examples of this measurement are between equipments D and E, between E and G, and between G and K. This resistance should not exceed 20 milliohms. Further, measure the resistance between the ground terminals of equipments that are also interconnected with signal cables and control lines. On systems employing equipment chassis or cabinet as signal ground (e.g., most higher frequency and rf systems), measure the cabinet-to-cabinet (or chassis-to-chassis) cables (see Connections B-F and F-H on Figure 2-11). Also measure the cabinet-to-structure resistance (see Connections B-C and K-J). These two resistances should be less than five milliohms. Record the test point locations and measured resistances in Section C, Part V, of the Survey Form.

2.2.2.2.6 Ground System Noise Survey. Stray currents on the fault protection subsystem, signal reference subsystem, and cable shields are frequent causes of common-mode noise interference in facilities. The assessment of these currents is a vital part of the survey of electronic facilities. Measure both stray power currents and other non-power related currents as follows:

a. Using a clamp-on ammeter, check the ac load currents on the conductors of three phase supply lines. Note particularly any differences in line currents greater than 10 percent. Also check and record ac currents on neutrals.

b. Using the clamp-on ammeter, probe signal ground wires, signal reference subsystems, cable shields, or other conductors likely to be carrying stray power currents. Note particularly the current levels in the grounds of lower frequency equipments and in the shields of cables carrying video, data, or other types of signals with operating frequencies in the power frequency range. Typical locations in the illustration of Figure 2-11 where stray current measurements should be made are on the connection B-C between the rack of higher frequency equipment and the structure, on connection A-F between the equipment bay and the power panel, on the cabinet ground connection between lower frequency equipments E and G, and on connection J-K.

c. Record the results of the current measurements in Part VI of the Survey Form.

S: STRUCTURAL STEEL ELEMENTS
LF: LOWER FREQUENCY
HF: HIGHER FREQUENCY
PP: POWER PANEL

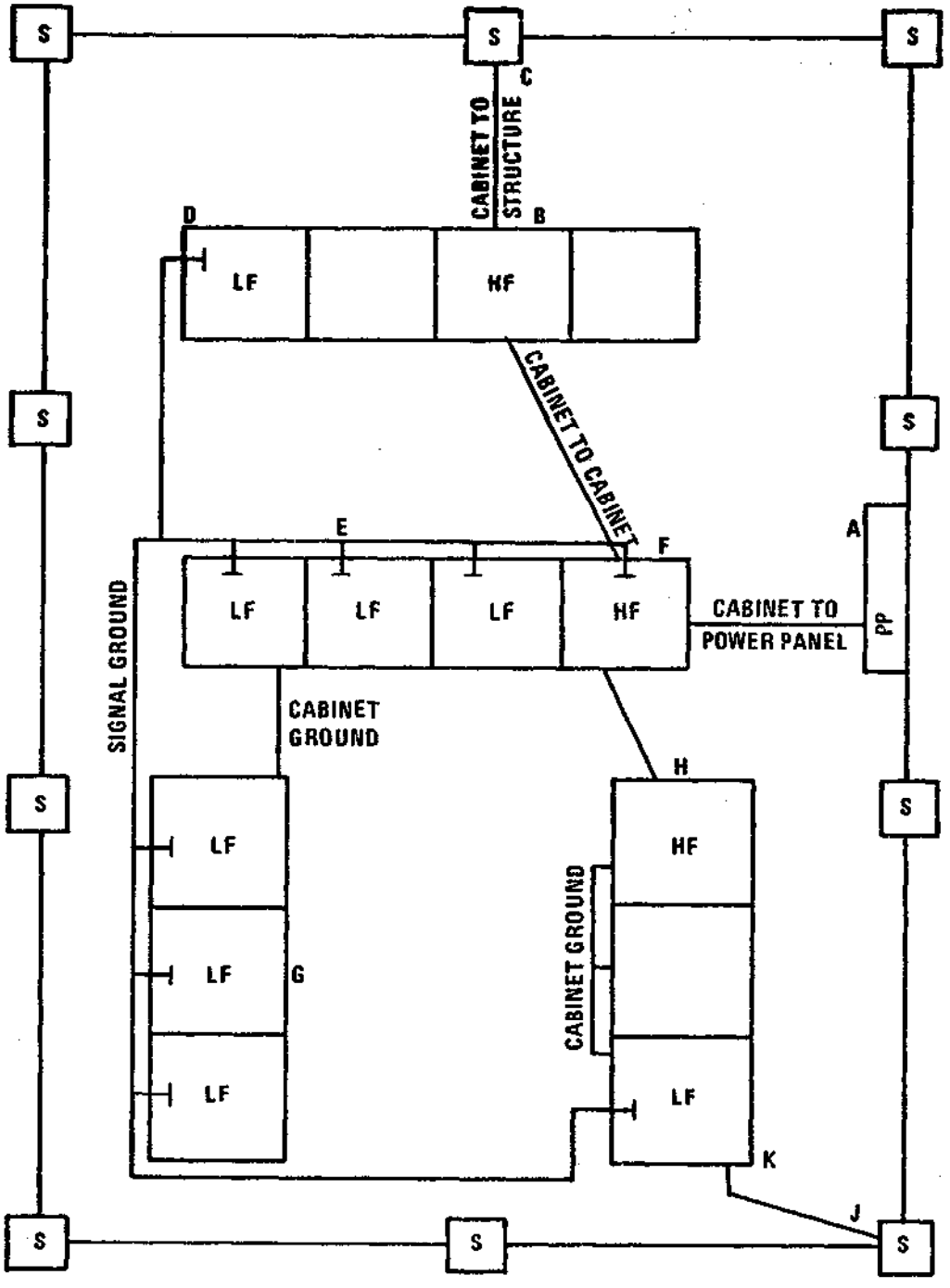

Figure 2-11. Typical Bond Resistance and Stray Current Measurement Locations in an Electronic Facility

a. Using the test procedure described in Section 2.2.3.2 measure the stray current levels on a selected number of shields surrounding sensitive signal cables, on conduit, on the signal reference subsystem, and on equipment ground cables. Document the test details (i.e., vertical sensitivity and sweep rate) on the photographs made of the oscilloscope displays and attach the photographs to the Survey Form.

e. Using the test procedure described in Section 2.2.3.3 perform differential noise measurements between interfaced equipments: between the lower frequency (or other) signal ground network and structural ground; between widely separated points on ground networks; between signal grounds in equipments and the point of connection to the earth electrode subsystem; and between any other two points where common-mode voltages are causing system or equipment noise problems.

f. Determine the type of grounding required, i.e., single-point or equipotential ground plane.

2.2.2.2.7 Shielding.

a. Identify the presence and nature (or type) of shields at the facility. (Recognize that shielding may be incidentally provided by a wall, screen, or other type of barrier that is primarily intended for a different purpose.) Describe the shields in Section A, Part VII of the Form.

b. Inspect screens, shielded cabinets, doors, covers, etc., of all designated rf barriers for wear, damage, corrosion, broken bond straps, broken or damaged bonds, and loose gaskets. Observe equipment operation for evidence of interference, noise, or malfunctions. Record deficiencies in Section B of Part VII. Ensure that grounding conductors passing through a designated rf barrier are bonded to that barrier,

c. Be sure that the bonds and bonding inspection (Section 2.2.2.2.2) includes the shields.

d. Examine cables and connectors for broken or frayed shields, improper mounting, and evidence of corrosion. Check to see if the termination of cable shields is in accordance with Sections 3.2.1.1.7 and 3.2.1.2.1. Note deficiencies in Section C of Part VII.

2.2.2.3 Test Procedures.

2.2.2.3.1 Bond Resistance. This test is intended to give a general indication of bond adequacy, based on the dc resistance of the bond.

a. Equipment Requirements. The equipment required for this test is as follows:

(1) A dc resistance bridge capable of measuring to about 0.001 ohm or better. The bridge should be portable and not be position-sensitive. Connection of the test sample to the bridge terminals should be easily performed without cumbersome adapters or special tools. An instrument with separate potential (voltage) and current terminals is preferred to a two-terminal device.

(2) A pair of heavy-duty spring clip leads for connection between the bridge and the bonded junction. Clip leads may be connected to braided straps and plugs to make connection to the bridge. Total resistance of external connectors and leads should not be greater than 0.001 ohm.

b. Equipment Setup.

(1) Using the heavy-duty spring clips and braids or low resistance wire, connect the leads to the bridge.

(2) Place the bridge in operation according to the manufacturer's operating manual.

(3) Zero the bridge, including leads, and connect the clip-leads across the bonded junction as shown in Figure 2-12. By placing the current leads away from the junction while placing the potential leads near the junction, the effects of the probe contact resistance are minimized. However, if the bond to be measured is internal to a metallic grid such that other current paths exist between the current probes in parallel to the one through the bond under test, the potential and current probes should be connected near to the same point (one potential probe and one current probe on each side of the bond). Otherwise, a gross error may result. When multiple parallel paths exist, this procedure may not adequately indicate the true condition of the specific junction under interest, but it will indicate the total resistance between both sides of the junction.

c. Test Procedure.

(1) Adjust the bridge balance until a null is obtained.

(2) Record the indicated resistance.

2.2.2.3.2 Ground System Noise Current. This test procedure measures the stray currents on fault protection subsystem, signal grounds, and cable shields which are frequent causes of common-mode noise interference within a facility.

a. Equipment Required.

(1) Oscilloscope (battery operated, if available).

(2) Oscilloscope current probe.

(3) Oscilloscope camera.

b. Equipment Setup and Test Procedure.

(1) Connect the current probe, current probe amplifier, and oscilloscope as shown in Figure 2-13.

(2) Observe the oscilloscope-displayed ambient level at each test point.

(3) Photograph the ambient level at each test point.

(4) Set the oscilloscope to trigger at a level slightly above the ambient.

(5) Set the oscilloscope for single sweep operation and open the camera shutter.

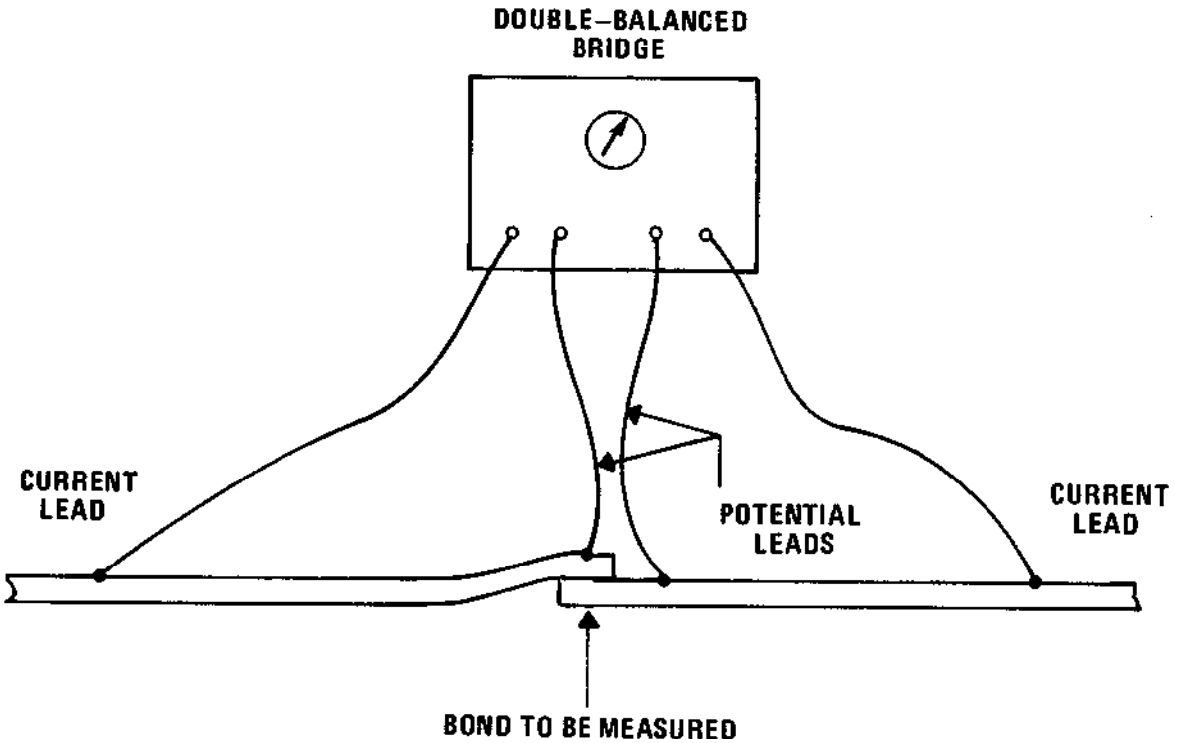

Figure 2-12. Bond Resistance Measurement Technique

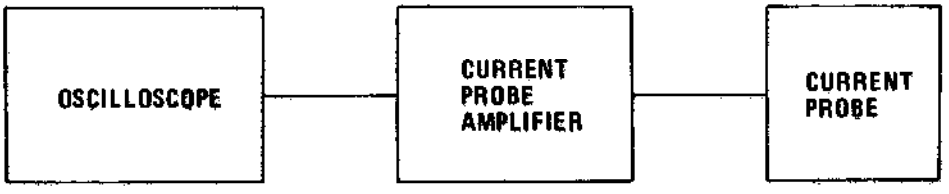

Figure 2-13. Test Setup for Stray Current Measurements

(6) Let the camera shutter remain open for five minutes or until the oscilloscope is triggered, whichever occurs first. (Longer sampling periods may be used if desired.)

(7) Record pertinent information on the test photograph,

(8) If a spectrum analyzer plug-in is available for the oscilloscope, perform the current measurements in the frequency domain as well as the time domain. (Frequency domain measurements can be of great assistance in identifying the source of interference currents.1

2.2.2.3.3 Differential Noise Voltage.

a. Equipment Required.

(1) Oscilloscope with time and frequency domain plug-ins.

(2) Oscilloscope camera.

(3) Isolation transformer.

(4) Required lengths of shielded cable.

b. Equipment Setup and Test Procedure.

(1) Set up the equipment as shown in Figure 2-14. Note that the signal probe and the "ground" reference probe are connected to each of the two points between which the voltage differential is desired.

(2) After an adequate warm-up time, photograph the ambient noise level in both time and frequency domains.

(3) If transient data is required, proceed as indicated in steps four through seven in Section 2.2.2.3.2, above,

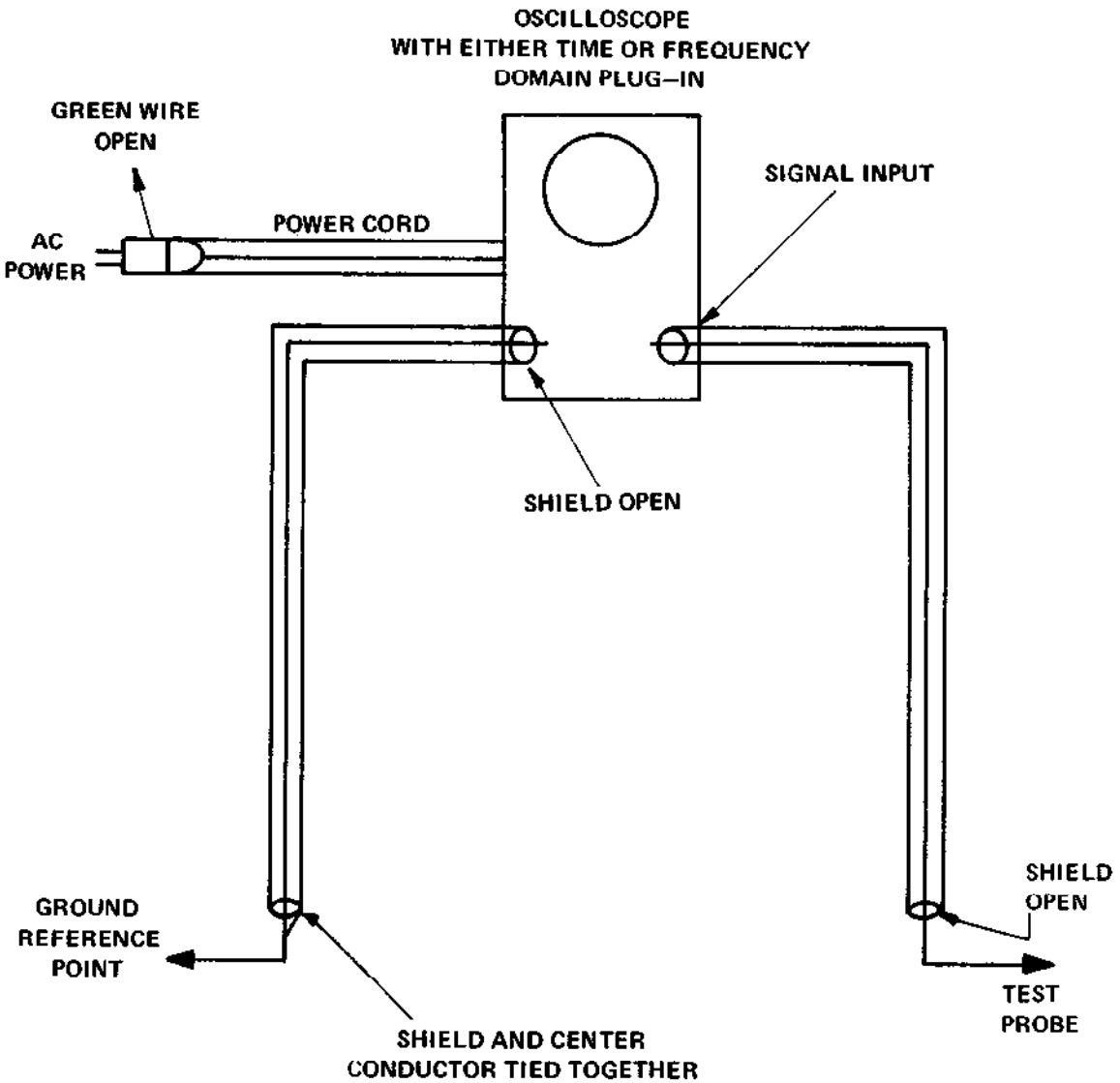

Figure 2-14. Oscilloscope Connections for Measuring Voltage Levels on Ground Systems

2.2.2.4 Survey Form.

FACILITY

GROUNDING, BONDING, AND SHIELDING

Facility _____ Date _____

Location _____ Inspector _____

PART I - EARTH ELECTRODE SUBSYSTEM

A. Configuration (Sketch or attach drawing):

B. Identify:

Rod Size and Length _____ Grounding Conductor Size and Length _____

Rod Composition _____ Grounding Conductor Composition _____

Interconnecting Cable Size _____ Ground Wells (Yes/No) _____

Interconnecting Cable Depth _____ Ground Wells (Size/Type) _____

C. Bonds:

General Condition: Excellent _____ Good _____ Poor _____

Unacceptable _____

Specific deficiencies _____

(See also Part II, Bonds)

D. Soil Conditions:

Type Soil: Loam or Humus _____ Clay _____ Sand _____

Gravel _____ Rock _____

General Moisture: Dry _____ Damp _____ Wet _____

Other Comments: _____

_____

_____

_____

E. Resistance Measurement:

Sketch of Test Setup (Indicate probe locations, spacings, etc.):

F. Weather (at time of resistance measurement):

Wet _____ Dry _____ Temperature _____

Snow _____ Rain _____ Mist _____

Days since last rainfall (or snow): Same day _____ l-5 Days _____

5-19 days _____ more than 20 days _____

PART II - BONDS

A. General Overall Condition (check):

Excellent _____ Good _____ Poor _____ Unacceptable _____

B. Specific Deficiencies:

Location of Bond	Nature of Defect

(Use additional sheets if necessary)

C. Resistance (Use double-balanced dc bridge or approved bond resistance meter and identify those bonds whose resistance exceeds one milliohm):

Location of Bond	Nature of Defect

(See text for selection of bonds to measure)

D. Bond Jumpers (Specific observations or deficiencies);

Location	Material	Length	Wire/Strap Size

(Use additional sheets if necessary)

PART III - LIGHTNING PROTECTION SUBSYSTEM

A. Layout (Sketch or attach engineering drawings):

B. UL Master Label Approved: Yes _____ No _____

C. Air Terminals (Lightning Rods):

Height _____ Location _____

Is height sufficient to protect facility and/or antennas? (1:1 cone of protection)
Yes _____ No _____

Material _____

Evidence of burning, pitting, or melting? (Identify location and specific evidence)

Evidence	Location

D. Roof Conductors:

Cable Size _____

BEND RADIUS: (8 inches)
> _____ < _____

Cable Material _____

BEND ANGLE (90 degrees)
> _____ < _____

Specific Deficiencies:

Location	Deficiency
_____	_____
_____	_____
_____	_____
_____	_____

E. Down Conductors:

Structure _____ or Separate Conductors _____

Conductor Size _____

Conductor Composition _____

Bend Radius_____ Bend Angle_____

F. Fasteners and Mounting Hardware:

Deficiency	Location
_____	_____
_____	_____
_____	_____
_____	_____
_____	_____

G. Guards:

Type _____

Properly Bonded _____

Physical condition _____

Note Location and Nature of Specific Deficiencies below:

Location	Deficiency
_____	_____
_____	_____
_____	_____
_____	_____
_____	_____

PART IV - FAULT PROTECTION SUBSYSTEM (Safety Ground)

A. Grounding Conductor (Green Wire):

1. Connection diagram (Include transformer connections and neutral connection in first service disconnect (main breaker)).

2. Cable sizes - Determine and indicate on the above diagram the size cables used for the connections.

3. Is grounding (green) conductor in same conduit as service (black) and grounded (neutral/white) conductors?

Yes ____ No ____ if no, record all locations/runs.

Equipment Served	Location	Length of Cable

4. Determine and record connections to earth electrode subsystem:

Connection	Location	Length and Size of Cable

B. Equipment Safety Ground (Schematic or description of safety network):

(On above diagram (or on the engineering drawings) indicate wire sizes, connection points, use of conduit, cable tray connections, etc.)

c. Stray Current Measurements:

Location	Current Reading

PART V - SIGNAL REFERENCE SUBSYSTEM GROUNDING

A. General Description of Signal Grounding Network (Use sketches where appropriate):

B. Identify Wires and Buses Serving as Signal Ground Conductors (Record locations):

Location	Function

C. Ground System Point-to-Point Resistance (Perform selected measurements with double balanced dc bridge):

Test Points	Resistance

PART VI - NOISE AND CURRENT LEVELS

A. Stray Power Current Measurements:

Test Point or Conductor	Current Level

B. Noise Voltage Measurements (Attach (or include) photographs of oscilloscope displays):

PART VII - SHIELDING

A. Existing Shields (Intentional and incidental)

Nature	Location

B. Condition of Shields:

System or Location	Nature of Deficiency

C. Cables and Connectors:

Location	Deficiency

2.2.3 Guidelines for Upgrading.

Use the information available from the corrected drawings and the facility survey to determine if modification or upgrading of the facility is necessary. Compare the grounding, bonding, shielding, and lightning protection networks and practices with the recommendations of Chapter 1 of this volume. While making these comparisons, be particularly alert for indications of operational, installation, or maintenance problems (either with a system or with an equipment) which may be directly or indirectly related to a noted deficiency. Where a need for upgrading is indicated, determine what retrofit steps would be necessary and estimate the costs. If the operational mission of the facility justifies the cost, proceed with the implementation.

The following guidelines may be used to help evaluate the survey findings and to help define the retrofit steps which should be taken. This set of guidelines is not to be considered as all inclusive. Specific situations can be expected to arise that will not be adequately covered by the guidelines. These situations must be recognized and dealt with on an individual basis.

a. If the measured resistance of the earth electrode subsystem is greater than 10 ohms, review Section 1.2.1 to help identify the reason for the high resistance (see also Volume I, Section 2.3). In addition, review the past record (if available) of earth resistance measurements for signs of gradual increases in resistance as well as sudden resistance changes. (Discard from consideration “zero” resistance readings and other similarly unobtainable values. Review Section 2.2.2.2.1 for the correct measurement procedure.) Examine the resistance readings for possible correlation with site changes (Section 1.2.1.3) and local climatic conditions (Section 1.2.1.4). Either of these situations could produce an increase in the resistance of the electrode and necessitate upgrading the system to reachieve 10 ohms.

b. Once the reason for the high resistance is established, determine the most appropriate method in terms of cost and ease of implementation for reducing the resistance. Typical alternatives include the use of more or longer ground rods, the installation of horizontal grids or wires (Section 1.2.2.3), chemical salting (see Volume I, Section 2.9.3), or the drilling of wells down to the permanent water table.

c. Carefully review the building drawings to insure that proper connections to the earth electrode subsystem are provided for all elements of the facility (see Sections 1.2.3, 1.3.2.2.2, and 1.5). For example, where building expansions have occurred or major equipment additions or relocations have been made, the earth electrode subsystem should be expanded to serve the new areas. Where such expansions are made, they should conform to Section 1.2.3.

d. All specific earth electrode subsystem installation deficiencies such as grounding conductor sizes not in conformance with MIL-STD-188-124A requirements or maintenance deficiencies such as loose or corroded bonds and fasteners should be corrected as soon as possible.

e. If no lightning protection subsystem exists for the structure, consult Volume I, Section 3.8 for guidance in determining whether a subsystem needs to be installed. If a new subsystem is installed, it should conform to the recommendations of Section 1.3.

f. Where a structural lightning protection subsystem exists, all deficiencies noted during the survey should be corrected. For example:

(1) all seriously degraded or damaged air terminals should be replaced;

(2) air terminals should be relocated as needed so that they are the objects of highest elevation on the structure; and where they provide a 1:1 cone of protection for the antennas without affecting their operation;

(3) down conductors should be rerouted or additional down conductors added where more direct paths to the earth are needed (see Section 1.3.2.2);

(4) if not already provided, the lightning protection network should be interconnected with the earth electrode subsystem, electrical ground, utility pipes, equipment grounds, and with the building ground to provide common grounding for all;

(5) all corroded and mechanically damaged connectors and fasteners should be replaced with UL-approved devices; and

(6) missing and severely damaged guards should be replaced.

g. The lightning protection subsystem should be expanded as needed to provide protection for those parts of the facility extending outside the established cones of protection (see Section 1.3.2.1).

h. At those facilities where the lightning outage history indicates a need for surge protection on either signal or power lines, appropriate lightning and surge protectors should be installed. Insure that the protectors are adequate for protecting the type of equipment on which installed (see Volume I, Section 10.4.2.3).

i. Review electrical wiring diagrams and the electrical equipment distribution within the facility to determine possible direct or indirect coupling paths between noisy equipments and susceptible electronic apparatus. Apply corrective measures such as:

(1) relocate equipments (see Section 1.9.1);

(2) redistribute the electrical load so that potentially interfering equipments are served by separate feeders;

(3) install electrical feeders in steel conduit or raceway to reduce magnetic fields; and

(4) relocate signal lines to sensitive equipments at the maximum possible distance from power conductors feeding noisy equipments.

j. Correlate, if possible, any evidence of equipment malfunctions due to electrical noise on signal or control cables with the measured values of stray currents or voltages on grounding conductors and on cable shields. If such correlation exists, determine as best as possible the probable cause of such noise voltages using the principles set forth in Volume I, Chapters 5 and 6. Then, apply the techniques described in Sections 1.5, 1.8, and 1.9 to reduce the noise to a level acceptable to the equipments in the facility.

k. Carefully review the drawings of the facility to identify the type of signal grounding employed throughout the facility, If operational experience as indicated by maintenance logs or outage reports and operator comments reveal problems with system noise and interference attributable to grounding deficiencies, review in detail Volume I, Chapters 5 and 6, and Section 1.5 of this volume. Based on this review and the relative severity of the problems, choose the most appropriate noise minimization procedures and implement them.

l. Where shielding deficiencies exist, determine if the need is for additional shielding or for improved maintenance of the existing shields. If no shielding is present, design and install shields as needed. See Section 1.8.1 for design assistance. If the existing shields have simply degraded through poor aperture control and poor bond or seam maintenance, implement corrective measures immediately (see Sections 1.7 and 1.8 and also see Sections 3.3 and 3.4).

m. If the structure is used as a lightning down conductor or as an electrical safety grounding conductor, see that all joints are effectively bonded (see Section 1.7.1).

n. If more than 25 percent of the bonds measured exhibit a resistance greater than one milliohm (after the steps recommended in Step “d” of Section 2.2.2.2.2 are taken), all bonds throughout the facility should be inspected carefully, and the resistance measured. Each one found deficient should be redone in accordance with the recommendations set forth in Section 1.7.

o. Indicate all changes made during the upgrading process on the facility drawings.

2.2.4 Expansion of Existing Facilities.

As operational requirements change, expansions of the grounding and shielding networks in a facility will be necessary. When such actions are necessary, it is essential that the added elements maintain the philosophy and integrity of the existing networks. When making additions or modifications to shielded areas, the original level of shielding integrity must be maintained. Particular attention must be directed to the careful bonding of connector shells, the installation of filters, and other practices which may drastically degrade the shielding effectiveness of a housing or other enclosure if not controlled.

Following major additions to the facility, the facility should be resurveyed. Any deficiencies in the installation or compromises to the original networks should be corrected. File a copy of all survey results in the maintenance file for the facility to provide the initial starting point for the maintenance history. Finally review all drawings to verify that they are complete and accurately reflect the actual installation.

2.2.5 Expansion of Existing Facilities for Higher Frequency Grounds.

Most existing communication facilities will require the addition of an equipotential plane to satisfy the grounding requirements for frequencies above 30 kHz. When both higher and lower frequency requirements must be met, a hybrid system may be required but in most cases the equipotential plane will suffice for both requirements.

The equipotential plane may be installed on the floor under tile or carpet. If this is impractical, the equipotential plane may be installed overhead but every consideration should be given to placing it on or in the floor. In some cases it may be installed under the floor with ground risers penetrating the floor to the equipments installed above. Figure 2-15 is an example of the plane installed overhead.

2.3 MAINTENANCE. Well designed and properly installed grounding, bonding, shielding, and lightning protection networks in a new facility or in an existing facility can rapidly deteriorate unless adequate and thorough maintenance is performed at regular intervals throughout the life of the facility.

2.3.1 Schedules and Records.

In a new facility, consider the initial checkout (see Section 1.13) as the first maintenance inspection for the facility. Utilize the results or information provided by the initial facility inspection as a base or starting point of comparison of the results of subsequent inspections. Subsequent inspections should be performed at least annually. In addition, a thorough inspection should be performed on affected parts or elements of the networks following major changes or additions to the facility either of the structure itself or of the equipment or systems located in the structure.

In an older facility, consider the survey (if performed) described in Section 2.2 as the initial maintenance inspection. If a survey has not been made, an initial inspection of the facility should be made to determine the general condition of grounding networks, bonds, shields, and lightning protection subsystems. Subsequent to the survey or initial inspection, a maintenance inspection should be conducted annually and after major changes or additions to the facility as discussed above.

Chronological records of all tests and observations should be maintained. When a significant departure from the record is noted, an investigation should be performed to determine the cause and the necessary corrective action taken. Any measurement (i.e., earth electrode subsystem resistance, bond resistance, point-to-point ground network resistance, etc.) not meeting the specified or recommended value should be immediately investigated to see if rework is desired.

2.3.2 Maintenance Procedures. Maintenance procedures for the earth electrode subsystem, lightning protection subsystem, signal reference subsystem, fault protection subsystem, facility ground system, bonding, and shielding are presented in Sections 2.3.2.1 through 2.3.2.6. Upon completion of any or all of these procedures, prepare the Facility Maintenance Report of Section 2.3.3 and place it in the permanent maintenance file or record along with other supporting evidence such as test results, photographs, and drawings. Where deficiencies are noted that are immediately correctable (e.g., broken or misplaced bond wires or jumpers, loose bolts or screws, or other minor defects), they should be corrected with appropriate notation made on the Facility Maintenance Report. A Major Discrepancy Report (illustrated in Figure 2-16) should be made out on major deficiencies (e.g., earth electrode resistance too high, parts of structure outside the cone of protection, excessive current levels on signal ground conductors, etc.) to identify those areas needing significant rework or upgrading. (Do not confuse rework or upgrading associated with normal maintenance activity with a total facility rework or upgrading as described in Section 2.2 unless the facility has degraded to the point where a major overhaul is necessary for minimal performance or acceptability.)

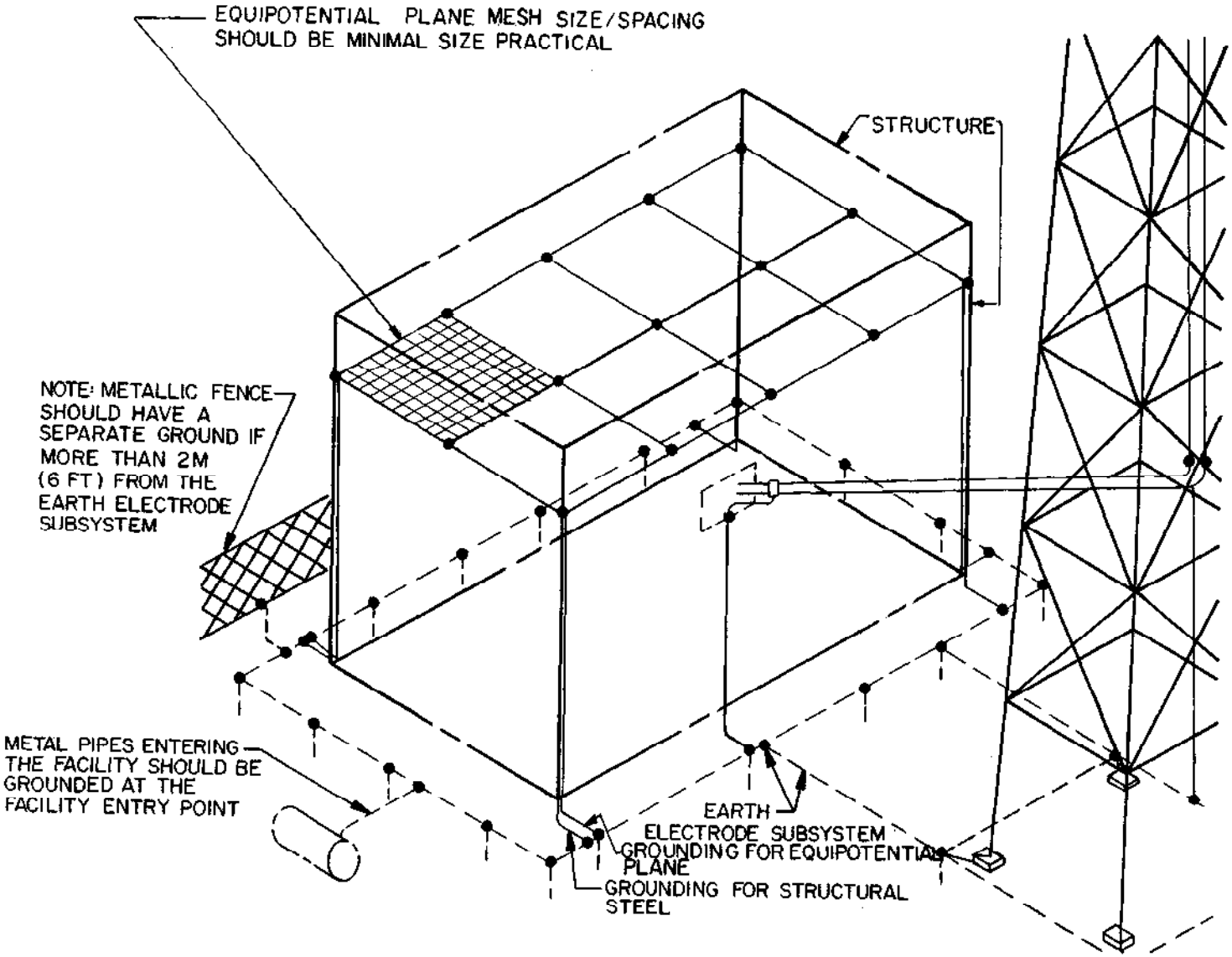

Figure 2-15. Example of Equipotential or Multipoint Grounding

MAJOR DISCREPANCY REPORT

1. Facility _____

2. Location _____

_____

3. Description of discrepancy _____

_____

_____

_____

_____

_____

4. Inspector's remarks _____

_____

_____

_____

5. Inspector(s) _____

_____

6. Date _____

7. Initials _____

Figure 2-16. Major Discrepancy Report Form

2.3.2.1 Facility Maintenance Procedure (Earth Electrode Subsystem).

1. TECHNICAL DATA REFERENCES:

a. Grounding, Bonding, and Shielding, MIL-HDBK-419A Volumes I and II, MIL-STD-188-124A.

b. Engineering drawings which show earth electrode subsystem.

2. RELATED MAINTENANCE PROCEDURES:

a. Lightning Protection.

b. Fault Protection.

c. Bonding.

3. APPLICABLE TEST PROCEDURES:

a. Earth Resistance Test (see Section 2.2.2.2.1).

b. Bond Resistance Test (see Section 2.2.2.3.1).

4. TEST EQUIPMENT REQUIRED:

a. Double Balanced DC Resistance Bridge or other acceptable Ohmmeter.

b. Earth Resistance Test Set.

c. 30-meter (l00-foot) Measuring Tape or Surveyor's Chain.

d. Camera.

5. MATERIALS REQUIRED:

a. Test leads for earth resistance test set if not supplied by manufacturer or if not available. Where leads longer than those supplied by the manufacturer are needed, extra lengths of stranded No. 16 or No. 18 wire are necessary.

b. Ground probes if not supplied with earth resistance test set (see Section 1.2.1.1).

c. Film and flash bulbs or electronic flash for camera.

6. PROCEDURE:

a. Warm up equipment according to manufacturer's instructions.

b. Measure the resistance to earth of the earth electrode subsystem.

(1) If the earth electrode subsystem is directly accessible through a ground well, connect the C_1P_1 terminals of the test set directly to a ground rod or the interconnecting cable.

(2) If the electrode is not directly accessible, connect C_1P_1 to an interconnecting riser such as a signal ground cable, the power system grounding conductor, a lightning down conductor, or a structural grounding connection (see Section 1.2.3).

c. Enter the measured value of earth resistance on the Facility Maintenance Report Form (Section 2.3.3).

d. Inspect all accessible portions of the system. Particularly look for loose connections, corrosion, and physical damage. (Take photographs as necessary to show nature of problems for before and after comparisons and for historical documentation purposes.) Note any undocumented changes or modifications to system. Update drawings as needed.

e. Correct minor deficiencies (e.g., clean surfaces, retighten or replace connectors and fasteners, reapply protective coatings, etc.).

f. Major deficiencies should be the subject of a Major Discrepancy Report. After major deficiencies are corrected, the facility should be reinspected.

g. Provide other requested information on the inspection form. File the inspection report form along with supporting data or documentation in the permanent maintenance file for the facility.

2.3.2.2 Facility Maintenance Procedure (Lightning Protection Subsystem).

1. TECHNICAL DATA REFERENCES:

a. Grounding, Bonding, and Shielding, MIL-HDBK-419A Volumes I and II, MIL-STD-188-124A.

b. Underwriter's Laboratories Publication UL 96A or Lightning Protection Code, NFPA No. 78.

c. Engineering drawings of the lightning protection networks.

d. Architects drawings showing building profile views.

2. RELATED MAINTENANCE PROCEDURES:

Bonding.

3. APPLICABLE TEST PROCEDURES:

Bond Resistance Test (see Section 2.2.2.3.1).

4. TEST EQUIPMENT REQUIRED:

a. Double Balanced Resistance Bridge or approved Ohmmeter capable of measuring one milliohm and five milliohms.

b. Camera, if desired.

5. MATERIALS REQUIRED:

Film and flash bulbs or electronic flash for camera.

6. PROCEDURE:

a. Follow the procedure of Section 2.2.2.2.3.

b. Examine all elements of the structure and antennas to insure that an adequate cone of protection exists (see Section 1.3.2.1). Note any additions to the exterior of the structure; make sure that all such additions do not extend outside of the established cone of protection.

c. Perform a comprehensive inspection of the entire lightning protection subsystem. Note all deficiencies in Part II of the Facility Maintenance Report Form. Complete a Major Deficiency Report on all deficiencies not correctable during the inspection.

2.3.2.3 Facility Maintenance Procedure (Bonding).

1. TECHNICAL DATA REFERENCES:

Grounding, Bonding, and Shielding, MIL-HDBK-419A Volumes I and II, MIL-STD-188-124A.

2. RELATED MAINTENANCE PROCEDURES:

None.

3. APPLICABLE TEST PROCEDURE:

Bond Resistance Test (see Section 2.2.2.3.1).

4. TEST EQUIPMENT REQUIRED:

a. Double Balanced Resistance Bridge or approved Ohmmeter capable of measuring resistances of less than one milliohm.

b. Camera, if desired.

5. MATERIALS REQUIRED:

Film and flash bulbs or electronic flash for camera, if used.

6. PROCEDURES:

a. Follow the procedure of Section 2.2.2.2.2.

b. Record the results of the inspection and measurements in Part III of the Facility Maintenance Report. Attach supporting evidence such as photographs, sketches, etc.

c. File a Major Discrepancy Report on all noncorrectable deficiencies.

2.3.2.4 Facility Maintenance Procedure (Fault Protection Subsystem (Safety Ground)).

1. TECHNICAL DATA REFERENCES:

a. Grounding, Bonding, and Shielding, MIL-HDBK-419A Volumes I and II, MIL-STD-188-124A.

b. National Electrical Code NFPA 70.

2. RELATED MAINTENANCE PROCEDURES:

a. Earth Electrode Subsystem.

b. Bonding.

3. APPLICABLE TEST PROCEDURES:

Bond Resistance Test (see Section 2.2.2.3.1).

4. TEST EQUIPMENT REQUIRED:

a. Double Balanced Resistance Bridge or approved Ohmmeter capable of measuring resistances of one milliohm, five milliohms and one megohm.

b. Clamp-on AC Ammeter.

c. Camera, if desired.

5. MATERIALS REQUIRED:

Film and flashbulbs or electronic flash for camera, if used.

6. PROCEDURE:

a. Follow the inspection procedure of Section 2.2.2.2.4.

b. Perform spot check resistance measurements on power receptacles and stray current measurements on safety ground to insure that the ground terminals on the receptacles are properly grounded to the facility ground system and no currents are flowing on grounding conductor (see Sections 1.4.5 and 3.2.2).

c. Record the results of the inspection measured stray current levels and resistance values in Part IV of the Facility Maintenance Report.

d. File a Major Discrepancy Report on all major deficiencies (particularly those representing a violation of MIL-STD-188-124A and the National Electrical Code).

2.3.2.5 Facility Maintenance Procedure (Signal Reference Subsystem (Signal Grounding)).

1. TECHNICAL DATA REFERENCES:

Grounding, Bonding, and Shielding, MIL-HDBK-419A Volumes I and II, MIL-STD-188-124A.

2. RELATED MAINTENANCE PROCEDURE:

Bonding.

3. APPLICABLE TEST PROCEDURES:

a. Bond Resistance Test (see Section 2.2.2.3.1).

b. Ground System Noise Current Test (see Section 2.2.2.3.2).

c. Differential Noise Voltage Test (see Section 2.2.2.3.3).

4. TEST EQUIPMENT REQUIRED:

a. Double Balanced Resistance Bridge or approved Ohmmeter capable of measuring resistances of one milliohm, 10 milliohms, and 100 milliohms.

b. 50-MHz Oscilloscope.

c. Isolation Transformer for Oscilloscope.

d. Clamp-on Current Probe for Oscilloscope.

e. Oscilloscope Camera.

5. MATERIALS REQUIRED:

a. Required lengths of coaxial cable for oscilloscope probes.

b. Film for oscilloscope camera.

6. PROCEDURE:

a. Follow the inspection and test procedures set forth in Sections 2.2.2.2.5 and 2.2.2.2.6.

b. Record the results of the inspection and measurements in Part V of the Facility Maintenance Report.

c. File Major Discrepancy Reports as needed.

2.3.2.6 Facility Maintenance Procedure (Shielding).

1. TECHNICAL DATA REFERENCES:

Grounding, Bonding and Shielding, MIL-HDBK-419A Volumes I and II, MIL-STD-188-124A.

2. RELATED MAINTENANCE PROCEDURE:

Bonding.

3. APPLICABLE TEST PROCEDURE:

Bond Resistance Test (see Section 2.2.2.3.1).

4. TEST EQUIPMENT REQUIRED:

Double Balanced Resistance Bridge or approved Ohmmeter capable of measuring resistances of one milliohm and five milliohms.

5. MATERIALS REQUIRED:

None.

6. PROCEDURE:

a. Inspect electromagnetic and personnel protection shields for continued shielding integrity, grounding, and bonding (see Section 2.2.2.2.7). Information on design and materials is available in Sections 1.8.2 and 1.8.4.

b. Complete Section IV of the Facility Report of Section 2.3.3.

c. File Major Discrepancy Reports as needed.

2.3.3 Facility Maintenance Report.

Facility _____ Date _____

Location _____ Inspector _____

PART I - EARTH ELECTRODE SUBSYSTEM

A. Resistance Measurement:

Sketch of Test Setup (Indicate Probe Locations, Spacings, etc.).

(Enter raw test data and plot resistance readings on attached form)

B. Resistance: _____ ohms. (Fall-of-Potential Method)

(Note precautions set forth in Section 2.2.2.2.1)

C. Weather:

Wet _____ Dry _____ Temperature _____ °F
Snow _____ Rain _____ Mist _____
Days since last rainfall (or snow): Same day _____ 1-5 days _____
5-19 days _____ more than 20 _____
General Soil Moisture: Dry _____ Damp _____ Wet _____

D. Months since last measurement: _____

E. Value of last measurement : _____

F. Comparison with last measurement : Lower _____ Higher _____ Same _____

G. Inspection Checklist:

	Initial
1. Check all accessible bonds and connections for looseness, corrosion, and physical damage.	_____
2. Measure stray current in grounding conductor between service disconnecting means and earth electrode subsystem (Current reading _____).	_____
3. Check for additions or modifications made since last inspection. Update existing drawings.	_____
4. Generally inspect facility site for changes (in vegetation, roads, parking areas, excavation, drainage, etc.) that could cause future earth resistance variations. Note such changes in General Comments below.	_____

5. Inspection Results or Observations.

Location	Condition or Deficiency	Corrective Action Taken

General Comments: _____

PART II - LIGHTNING PROTECTION SUBSYSTEM

A. Cone of Protection:

Condition	Initial
No change from previous inspection. (All facility components and antennas are within 1:1 cone of protection.)	_____
Additions made but within 1:1 cone of protection (update drawings to show locations of additions).	_____
Lightning protection subsystem needs expanding to include new additions.	_____

B. Inspection Checklist:

1. Check for evidence of burning, pitting, as well as melting of air terminals.	_____
2. Check for burned or melted down conductors and fasteners.	_____
3. Cheek for broken or severely damaged as well as distorted roof conductors, down conductors, and bonding jumpers.	_____
4. Look for signs of arcing or flashover indicating a need for bonding jumpers or spark gaps.	_____
5. Cheek for corroded or loose connectors and fasteners.	_____
6. Make sure that copper-to-aluminum contact does not occur except through UL-approved bimetallic connectors.	_____
7. Make sure that all guards for down conductors are in place and without severe mechanical damage.	_____
8. Make sure that all guards are bonded to down conductors (at both ends of guard).	_____

9. Record all deficiencies below:

Location	Deficiency	Corrective Action Taken

10. Additional Comments: _____

PART III - BONDING

A. General Overall Condition (check):

Excellent _____ Good _____ Poor _____

B. Resistance Measurements:

(Record the resistance of all bonds measured. See particularly Step d of Section 2.2.2.2.2 for those bonds which measure greater than one milliohm.)

Location of Bond	Resistance in milliohms

C. Deficiencies:

Location	Condition or Deficiency	Corrective Action Taken

PART IV - FAULT PROTECTION SUBSYSTEM (SAFETY GROUND)

A. Requirements Checklist:

	Initial
1. Inspect all electrical/electronic equipments for safety grounding conductors (green wire). Check to see that sizes conform to all designated requirements.	_____
2. Spot check all green wire connections to see that they are tight and free of corrosion.	_____
3. Check inside equipments, switch boxes, and distribution panels to see that the white wire (neutral) is not grounded at these locations. With neutral disconnected at first service disconnect, is resistance to ground at least one Megohm?	_____
4. Check the grounding connection at the first service disconnect to make sure it is tight and free of corrosion.	_____
5. Generally check the electrical supporting structures (see Section 1.4.5) for looseness in joints or bonds and evidence of corrosion.	_____
6. Cheek to see if the neutral and green conductors are properly interconnected at the first service disconnect and grounded (MIL-STD-188-124A Section 5.1.1.2.5).	_____

7. Record all deficiencies:

Location	Nature of Deficiency	Corrective Action Taken

B. Stray Current Measurements:

Location	Reading

PART V - SIGNAL REFERENCE SUBSYSTEM GROUNDING

A. Inspection Checklist: Initial

1. Visually inspect the signal reference subsystem for compromises in violation of the recommendations of Section 1.5. _____

2. Inspect connections to equipment signal ground terminals (see Section 3.2.1.1.2) and equipotential plane for looseness and corrosion. Apply corrective measures. _____

3. Check to see if any new equipments have been added or relocated since the last inspection. If so, check interconnecting cables for conformance with the requirements of Section 1.5. _____

4. Insure that labels and protective covers are in place and free of serious damage. _____

5. Inspect equipment grounding cables (see Section 1.5) for correct sizes, physical damage, and properly bonded end connections. _____

6. Record all deficiencies below:

Location	Deficiency	Corrective Action Taken

B. Ground System Point-to-Point Resistance (See Section 2.2.2.2.5 for selection of measurement locations):

Test Points	Measured Resistance

C. Attach Results of Ground System Noise Survey. Carefully compare results with those obtained during previous inspection to detect noticeable and significant changes in voltage and current levels.

PART VI - FACILITY SHIELDING (Designated rf Barrier)

A. Inspection Checklist:

	Initial
1. Check personnel barriers for mechanical strength, signs of damage, and proper grounding (if metallic).	_____
2. Insure that all shields around high voltage apparatus are properly labeled.	_____
3. Check electromagnetic shields for adequate bonding.	_____
4. Inspect all electromagnetic shields for holes or openings added since last inspection. Check to see that such openings are properly covered with screening or covers.	_____
5. Inspect power line and signal line filters on wires entering shielded areas for proper peripheral grounding.	_____
6. Inspect cable shield pigtails for excessive length.	_____
7. Inspect rf connectors for tightness, evidence of corrosion, or physical damage.	_____
8. Ensure that all grounding conductors penetrating a designated rf barrier are peripherally bonded to barrier.	_____

B. Note Deficiencies Below:

Location	Deficiency	Corrective Action Taken

2.3.4 Performance Evaluation Program.

a. Purpose. This program provides the checklist and procedures for the evaluation of compliance to overall Grounding, Bonding, and Shielding (GBS) practices prescribed in Volumes I and II.

b. Reference Documents.

(1) MIL-STD-188-124A, Grounding, Bonding, and Shielding for Common Long Haul/Tactical Communication Systems.

(2) National Electrical Code.

(3) Lightning Protection Code.

c. Procedures. The evaluation for Grounding, Bonding, and Shielding (GBS) is accomplished mainly through visual inspection by an evaluator qualified in GBS. The checklist for accomplishing the inspection is shown in Section d below. The checklist requires a “yes” or “no” answer. Shown in the checklist is the proper answer (indicated by X) for compliance with GBS requirements. The test procedure for measuring resistance to ground of the earth electrode subsystem is provided in Volume I, Chapter 2. A clamp-on ammeter with a full scale range of six amps on the lowest scale is required to measure ac current. Also required to measure bond resistance is a milliohm meter. Procedures for using these equipments come with the instruction book. An ohmmeter with the capability to measure one megohm resistance will also be required.

d. The Performance Evaluation Program GBS checklist follows:

PERFORMANCE EVALUATION PROGRAM
GROUNDING, BONDING, SHIELDING

Evaluation Station _____ Date _____

		YES	NO
1.	Is the resistance to earth of the earth electrode subsystem less than 10 ohms? MIL-STD-188-124A, 5.1.1.1.3.1	X	
2.	Are the lightning down conductors continuous and welded or brazed to the earth electrode subsystem? MIL-STD-188-124A, 5.1.1.1.5	X	
3.	Are underground metal pipes entering the facility bonded to the earth electrode subsystem? MIL-STD-188-124A, 5.1.1.1.6	X	
4.	a. Was the fall-of-potential method used to measure the earth electrode subsystem?	X	
	b. Is the data available for inspection? MIL-STD-188-124A, 5.1.1.1.7	X	
5.	a. Is there a separate grounding conductor (green wire) for the power system?	X	
	b. Is it installed with phase and neutral conductors? MIL-STD-188-124A, 5.1.1.2.1	X	
	c. Is conduit used in lieu of the separate grounding conductor? MIL-STD-188-124A, 5.1.1.2.5.1		X
6.	Are all non-current carrying metal objects grounded? MIL-STD-188-124A, 5.1.1.2.1	X	
7.	Are all main metallic structural members electrically continuous and grounded? MIL-STD-188-124A, 5.1.1.2.2	X	
8.	Are all metallic piping, tubing and supports electrically continuous and grounded? MIL-STD-188-124A, 5.1.1.2.3	X	
9.	Are all electrical supporting structures electrically continuous and grounded? MIL-STD-188-124A, 5.1.1.2.4	X	
10.	a. Is the ac neutral grounded only at the service entrance to the earth electrode subsystem?	X	
	b. Is there ac current on the green wire or on the signal reference network? MIL-STD-188-124A, 5.1.1.2.5; NEC 250-23		X

		YES	NO
11.	a. Are all generators grounded?	X	
	b. Are the frames of the generators grounded?	X	
	c. Are the neutrals of the generators tied together and grounded by a single lead to the earth electrode subsystem?	X	
	MIL-STD-188-124A, 5.1.1.2.5.2; NEC 250-26		
12.	Are the ground terminals of all ac outlets connected to the facility ground system through the grounding (green) conductor?	X	
	MIL-STD-188-124A, 5.1.1.2.5.3		
13.	a. Is one leg of each dc power system grounded?	X	
	b. At one point only, i.e, source or load?	X	
	MIL-STD-188-124A, 5.1.1.2.5.5		
14.	a. Is the facility protected against lightning?	X	
	b. Are all antennas inside a 1:1 cone of protection?	X	
	MIL-STD-188-124A, 5.1.1.3.2		
15.	Do any down conductors of the lightning protection subsystem have bends with a radius less than 20 cm (8 inches) or bends not less than 90°?		X
	MIL-STD-188-124A, 5.1.1.3.3		
16.	Are all metal objects within 1.8 meters (6 ft) of the lightning down lead bonded to the down conductor or grounded to the facility ground?	X	
	MIL-STD-188-124A, 5.1.1.3.3		
17.	Are all bonds between elements of the lightning protection subsystem welded or brazed or secured by UL-approved clamps?	X	
	MIL-STD-188-124A, 5.1.1.3.4		
18.	a. Does the tower have an earth electrode subsystem?	X	
	b. Is it connected to the earth electrode subsystem of the building7	X	
	MIL-STD-188-124A, 5.1.1.3.8.1		
19.	a. Are the down conductors from the tower bonded to the tower at the base?	X	
	b. Are the down conductors run through metal conduit?	X	X
	c. If yes, is the conductor bonded to the conduit at each end?	X	
	MIL-STD-188-124A, 5.1.1.3.8.3 and 5.1.1.3.7		
20.	Is the waveguide grounded (1) near the antenna (2) at the vertical to horizontal transition and (3) at the waveguide entry port?	X	
	MIL-STD-188-124A, 5.1.1.3.8.4		

		YES	NO
	Are all hand rails, ladders, stairways, antenna pedestals, and other objects subject to human contact grounded? MIL-STD-188-124A, 5.1.1.3.9	X	
22.	Are power lines at the point of entry to the facility protected with approved lightning arresters? MIL-STD-188-124A, 5.1.1.3.12	X	
23.	Are overall cable shields grounded at each end? MIL-STD-188-124A, 5.1.2.1.1.4	X	
24.	Do any bonds show any signs of corrosion? MIL-STD-188-124A, 5.2.3.1		X
25.	Are all bolted or threaded fastener bonds adequately torqued? MIL-STD-188-124A, 5.2.3.3 and 5.2.6.5; Table 1-23	X	
26.	Do any bonds have high resistance across the bond? MIL-STD-188-124A, 5.2.4		X
27.	Is soft solder used for bonds subject to lightning or power fault currents? MIL-STD-188-124A, 5.2.6.4		X
28.	Are C-clamps or spring clamps used for bonding? MIL-STD-188-124A, 5.2.6.6		X
29.	Are bonded areas visually clean? MIL-STD-188-124A, 5.2.8	X	
30.	Is each subassembly and chassis adequately bonded to the rack, frame, or cabinet? MIL-STD-188-124A, 5.2.10	X	
31.	Are cable connectors adequately mounted? MIL-STD-188-124A, 5.2.11	X	
32.	a. Are shields of coaxial cable adequately fastened?	X	
	b. Are shield pigtails less than 2.5 cm (1 inch) long? MIL-STD-188-124A, 5.2.12	X	

	YES	NO
33. a. Do shielded enclosures appear to retain their integrity?	X	
b. Do grounding conductors cross shielded enclosure without being bonded to enclosure?		X
MIL-STD-188-124A, 5.3.1		
34. In the routing and layout of wire, are power lines and high level signal lines kept separate from low level signal lines?	X	
MIL-STD-188-124A, 5.3.2.5		
35. Is there a need for a Lower Frequency Network?	X	X
MIL-STD-188-124A, 5.1.1.4.3		
36. Is there a need for a Higher Frequency Network?	X	X
MIL-STD-188-124A, 5.1.1.4.2		
37. Is a Lower Frequency Network installed?	X	X
MIL-STD-188-124A, 5.1.1.4.3		
38. Is a Higher Frequency Network installed?	X	X
MIL-STD-188-124A, 5.1.1.4.2		
39. Is the equipotential plane bonded to the facility ground earth electrode subsystem?	X	
MIL-STD-188-124A, 5.1.1.4.2		
40. Have any resistance measurements been conducted on the equipotential plane?		X
MIL-STD-188-124A, 5.1.2.1.1		
41. Are ground-fault-circuit-interrupters (GFCI) installed on 15 and 20 AMP convenience outlets?	X	
MIL-STD-188-124A, 5.1.1.2.5.7 and 5.1.2.2.2		

2.4 GROUNDING CONSIDERATIONS FOR CLASSIFIED INFORMATION PROCESSORS (RED/BLACK EQUIPMENTS) INSTALLED PRIOR TO THIS HANDBOOK.

2.4.1 Introduction. Previous chapters of this handbook provide grounding, bonding, and shielding practices for unclassified (BLACK) portions of the facilities or systems, and although the BLACK facility ground subsystem constitutes the basic ground for the whole facility, special additional grounding considerations must be designed into those facilities which process classified (RED) information. This section will cover those requirements which are necessary for the RED/BLACK grounding subsystem.

2.4.2 Existing Facilities. In the past, communication facilities have been designed and installed with separate RED and BLACK ground systems isolated from each other as shown in Figure 2-17. Each of these systems was generally installed as single-point or tree-type grounding networks. While these systems generally do not meet the current requirements of MIL-STD-188-124A, they continue to be in use at existing facilities. Descriptions of these systems are therefore included for maintenance purposes only. Single-point signal ground systems (either RED or BLACK) will not be installed in new or upgraded facilities processing classified information. Any major building or facility rehabilitation should include upgrading the signal reference subsystem to include use of the equipotential plane. All additions to existing buildings shall include an equipotential plane in accordance with MIL-STD-188-124A.

2.4.3 Protection Grounds. The methods of providing a ground for the signal reference subsystem are variable, and dependent on system equipment type, configuration, level of signaling, number of equipments, and location of the facility. These methods were intended to provide general parameters and outline the basic concept of a grounding system which would ensure an adequate signal-to-noise ratio in signaling circuits while affording requisite system security. The prime purpose of this guidance is to reduce or eliminate the number of points in the limited exclusion area (LEA) at which the RED equipment area nonferrous shield or signal ground makes contact with the distribution facilities or components of the ac fault protection subsystem in the LEA (including the equipment cases, duct, conduit, frames, panels) at other than intended points. Such isolation was intended to help reduce the probability of compromising emanations on the ac fault protection subsystem in the LEA. The physical makeup of many equipments in the government inventory however precludes complete separation of the ac fault protection subsystem from the signal reference subsystem. The ac fault protection subsystem was made up of several components for which the prime purpose is to safeguard life and equipment throughout the facility and is generally based on requirements defined in MIL-STD-188-124A. (Also See Figure 1-69.) The following comprise the fault protection ground subsystem:

a. AC Metal. The ac metallic distribution subsystem (part of the fault protection subsystem) of a facility includes all equipment cases, cabinet racks, duct, conduit (rigid, EMT, flexible) metallic cellular flooring, technical power panels, main power panels, and distribution frames, connected or interconnected in such a manner that the components are electrically common and connected to the ac protection ground or earth electrode subsystem. (See Figure 1-69.) Electrical continuity of the system is accomplished via metal-to-metal contact.

b. Grounding (Green) Wire. The ac power required to operate equipment in the facility has the hazard integrity doubly insured by the inclusion of an unbroken green grounding conductor within the normal ac metallic distribution or the fault protection subsystem of the facility. This green grounding conductor is

connected from the grounding electrode or bus of the main (first) service disconnect power panel to each case of all equipments in the LEA and Controlled Access Area (CAA) (see Figure 1-69). The green wire protective grounding feeder has no TEMPEST connotations or engineering techniques nor relationship with or part of the signal reference subsystem.

2.4.4 Signal Reference Subsystem. Under the old RED/BLACK criteria, the signal reference subsystem was called the signal ground system and was made up of those elements which permitted all station signals to be electrically referenced to a single-point (see Figure 2-17). The old signal ground system was made up of the following sub-sections:

a. Signal Ground Point. The signal ground point was the single point to which the RED and BLACK signal ground conductors (installed throughout controlled access areas) were connected.

b. Signal Ground Reference Point. In large facilities, several LEA's may have required multiple RED/BLACK signal ground conductor feeders and connections to the signal ground point. To reduce the number of connections to the actual signal ground point, a signal ground reference point may be established to provide flexibility within the confines of the CAA or LEA for a facility containing multiple LEA's. A single signal ground reference point may have been used for both RED and BLACK conductors, however in many instances separate RED and BLACK signal ground reference points may also have been used. They should have been located at a point central to all LEA's within a CAA or LEA. The location of the signal ground reference point should have also been planned to provide the most direct connection to the signal ground point or earth electrode subsystem.

C. Signal Ground Plane. A ground focal point for connection of the nonferrous shields and the common of power supplies was usually a copper bus insulated from, but installed in, on, or near the Main Distribution Frame (MDF), Intermediate Distribution Frame (IDF), or RED Intermediate Distribution Frame (RED IDF). The signal ground plane would be connected to the signal ground point, or signal ground reference point via a heavy, insulated wire (signal ground conductor) which was installed in metallic distribution facilities, and was at least 1/0 AWG. Signal ground planes regardless of system designation (RED, BLACK), were not directly interconnected to each other via signal ground conductors. The signal ground planes were common to each other only at the point where the separate RED and BLACK signal ground conductors ultimately made connection to the signal ground point or signal ground reference point.

d. Signal Ground Reference Plane. A common connection point was established to terminate either RED or BLACK (not both together) equipment circuitry such as digital communication equipment or digital terminal equipment. The signal ground reference plane was isolated from the ac protection ground or grounding conductor or bus. When used, signal ground reference planes were connected to the nearest appropriate signal ground plane.

e. Signal Ground Bus. A ground bus found in the MDF, IDF, or CDF served as the ground system connection point for the nonferrous shields of the signal and control cables. The shield ground bus was established and installed behind all vertical and horizontal terminal blocks in the distribution frames. The shield ground bus system was made up of rows of strapped (#22 AWG) terminals terminating the nonferrous

shields and an insulated conductor from strapped terminals to the insulated copper ground frame distribution cable behind the vertical and horizontal terminal blocks. The insulated conductor was brazed to the insulated signal ground plane near the distribution frames served. If a jumper wire was used from the distribution cable to the signal ground plane, a minimum of #10 AWG stranded conductor would generally suffice (see Figures 1-67, 1-68, and 2-18).

f. Other Protection Grounds. The signal ground is an earth ground which should be controlled. It is recognized that a ground system contained within a controlled space (CS) is not always possible. In this case other alternatives were considered. Notwithstanding the limitations associated with water pipes, they were however used as a single ground point. Another somewhat acceptable ground point was the case of the old cryptographic equipment (see Figures 2-19 and 2-20) which did not have any means to attach a ground feeder conductor to the equipment case. As noted in Figure 2-19A, the green wire ground connection in the power panel serving the cryptographic units was sometimes used.

2.4.5 Signal Filter Ground. To minimize the degradation of filter insertion-loss characteristics due to a nonzero impedance between the filter case and earth ground, filters were mounted directly on a ground reference plane. This ground plane was in turn connected to the signal ground point. If the filters could not be mounted on a ground plane or an equipment chassis (which effectively provides a ground plane), extreme care was taken to provide an adequate case ground. It was recommended that the case of the filter input utilize shielded cable and that it be connected to the filter via a coaxial type connection with the shield tied to the case via the connector shell (not via a pigtail). Additionally, a heavy braided ground strap was installed to connect the filter case to the ground point.

2.4.6 Grounding Precautions. Whenever possible, inadvertent contact to fortuitous conductors in walls or floors which did not have an adjacent CAA was avoided when installing equipment, cabinets, racks, or ducts. Moreover, insulators were not utilized unless specifically required, and then only on a case-by-case basis. All components of the station signal ground distribution system were contained within a CAA or controlled space. It has been the responsibility of the operating activity to ensure, by periodic inspections, that all areas of the signal ground system installed in the controlled space meet good engineering practices.

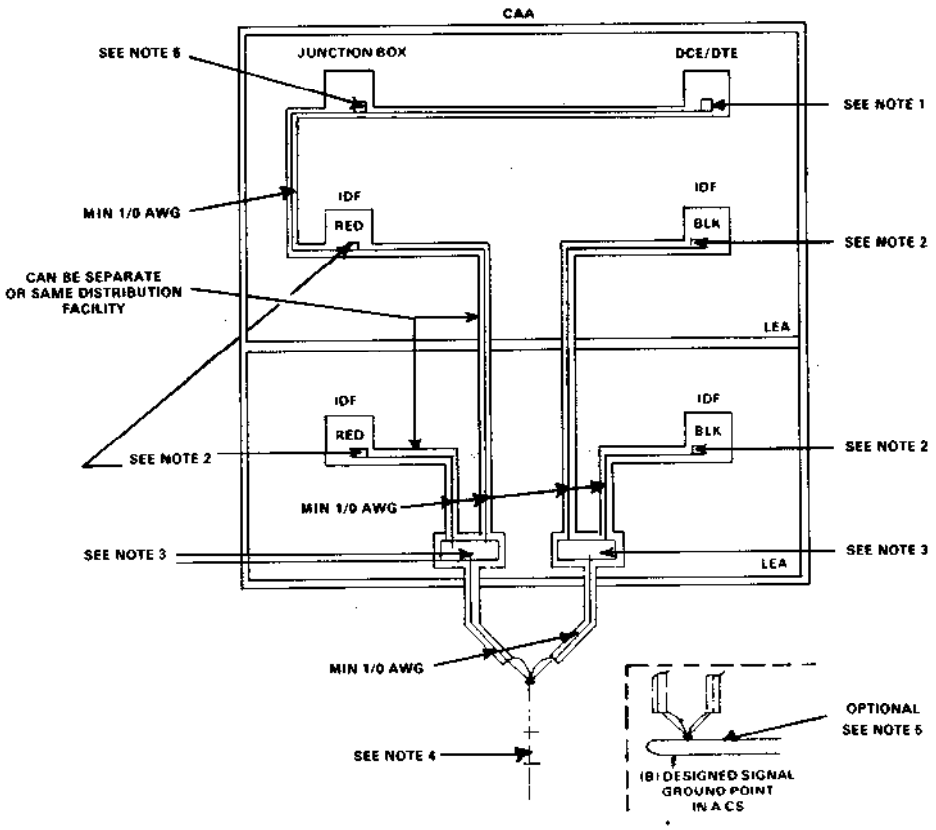

NOTES:
1. SIGNAL GROUND REFERENCE PLANE
2. SIGNAL GROUND PLANE OR BUS
3. SIGNAL GROUND REFERENCE POINT
4. COMMONLY USED GROUNDING TECHNIQUES
5. METALLIC WATER PIPE
6. AN INTERMEDIATE SIGNAL GROUND PLANE

Figure 2-17. Typical Multiple Area Ground Distribution (OLD RED/BLACK CRITERIA)

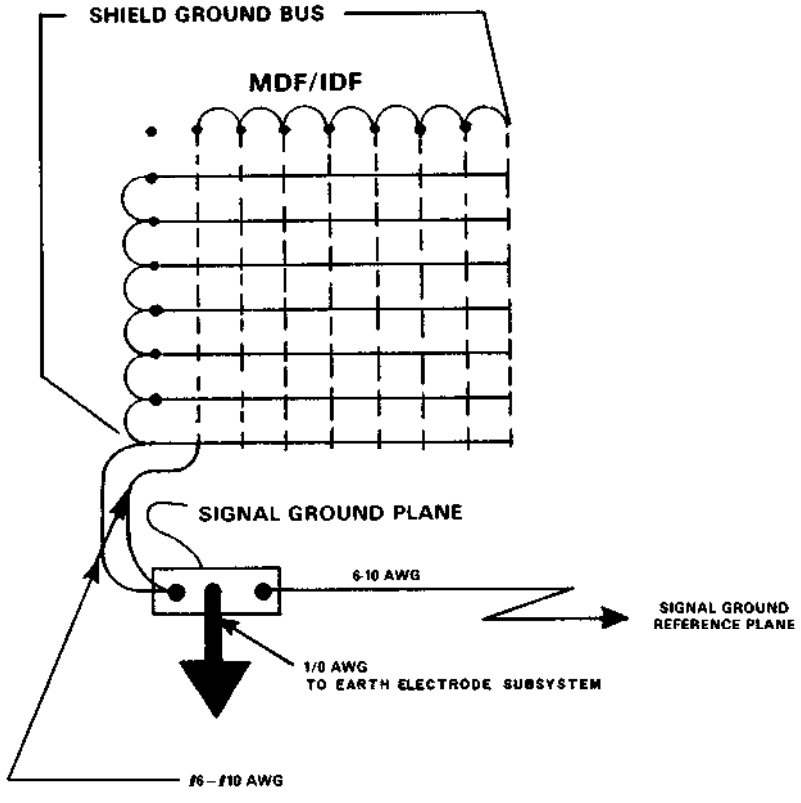

Figure 2-18. Typical Signal, Shield Ground, Bus Distribution System for Single-Point Ground (OLD RED/BLACK CRITERIA)

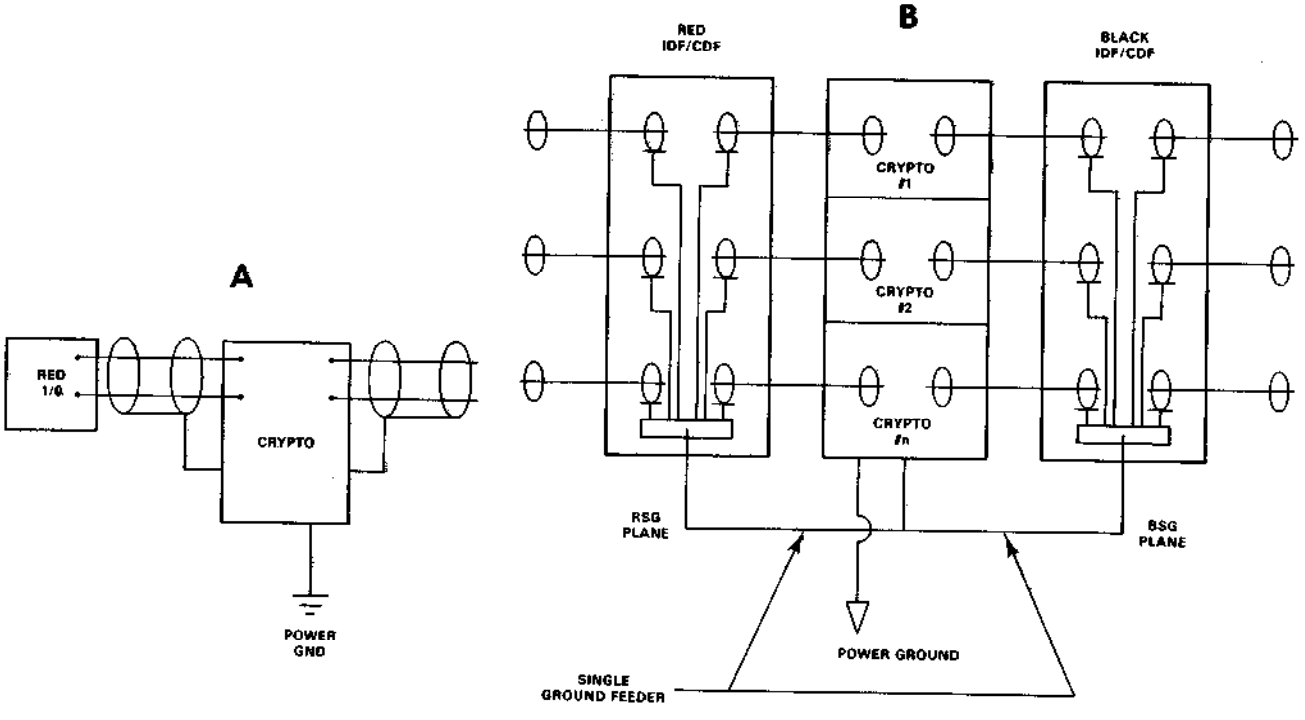

Figure 2-19. Crypto Equipment Grounds (OLD RED/BLACK CRITERIA)

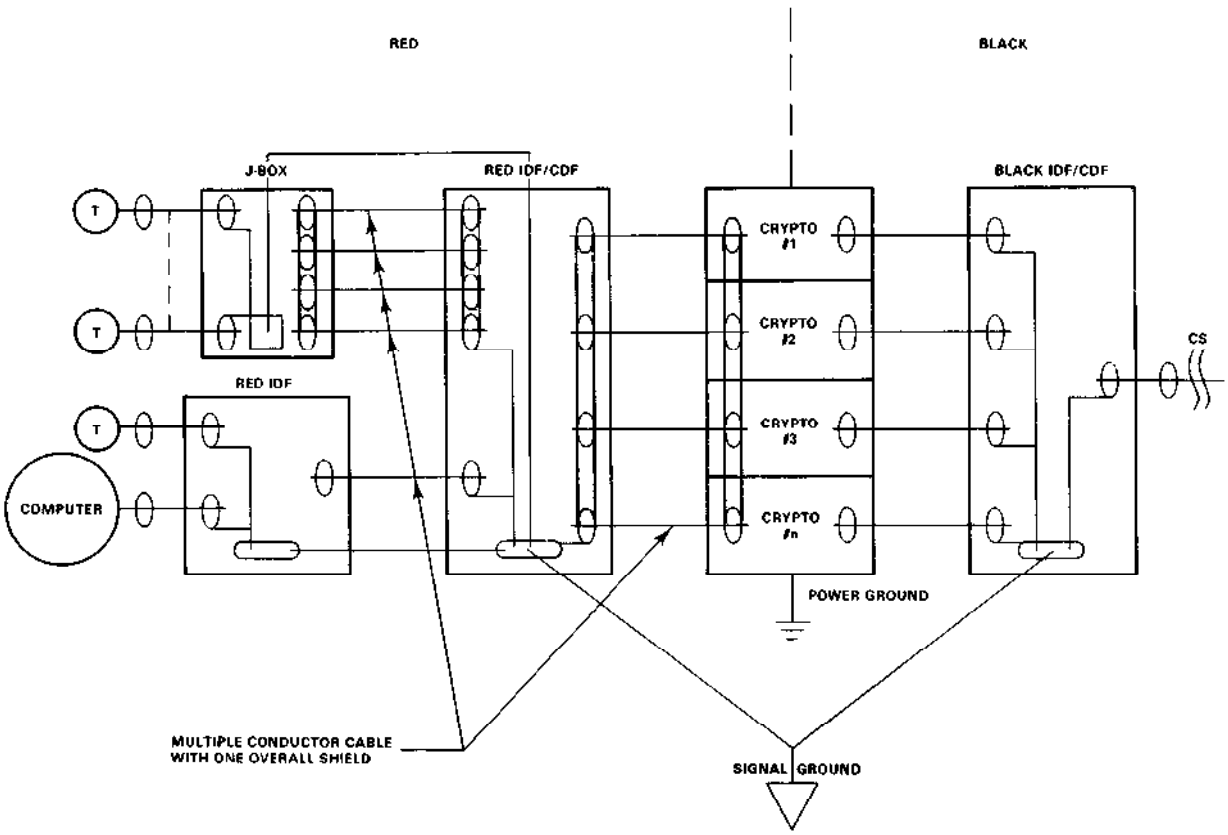

Figure 2-20. Typical Facility Ground System (OLD RED/BLACK CRITERIA)

CHAPTER 3

DESIGN CRITERIA

3.1 INTRODUCTION.

This chapter presents recommended grounding, bonding, and shielding practices for use in equipment design and construction at levels of implementation ranging from circuit board design to installation in the cabinets. Also presented is a set of inspection and test procedures for verifying that proper grounding, bonding, and shielding practices have been employed in the design and construction of the equipment. The design of the equipment should emphasize careful grounding, bonding, and shielding along with other interference and noise control measures in order to achieve compatible operation within the electronic system in which it is installed. This emphasis must continue to be maintained during the manufacture, installation, and operation of the equipment or system. For example, during manufacture, careful attention should be given to the routing of cables, the choice and mounting of cable connectors, the selection of signal and ground conductors, the correct implementation of all bonds within the equipment, etc. When the piece of equipment is installed, the configuration of the facility ground networks (for a detailed description of these networks, see Section 1.5) and the integrity of the shields within the facility must be maintained. Correspondingly, the ground networks and shields in the facility should not be allowed to degrade during the operation of equipments. For example, ground connections should not be randomly changed in efforts to improve equipment operation without considering what effect such changes will have on the overall system. This recommendation applies to changes internal to the equipment as strongly as it applies to changes made external to the equipment.

Basic personnel protection measures should also be incorporated. Inadvertent contact with metal parts operating at hazardous voltages must be prevented. Likewise, exposure to harmful emissions of either the ionizing or nonionizing type must be avoided by the provision of appropriate shields or barriers. In addition, protection must be provided against internal power line faults through the installation of grounding conductors of adequate size and the incorporation of appropriately sized fuses or circuit breakers into the design. Overvoltage and overcurrent protection should be provided on power lines, signal lines, and control lines. A variety of measures may be used singly or in combination to provide the needed protection. Efficient grounding, bonding, and shielding in accordance with the recommendations set forth in the following sections are important factors in the achievement of this protection.

3.2 GROUNDING PROCEDURES.

3.2.1 Signal Grounds.

Grounding in equipment must be given the same careful attention as is given to amplifier design, filter selection, component selection, and mechanical layout. In equipment, the signal grounding philosophy presented in Volume I, Chapter 5 and the practices recommended in Chapter 1 of this volume for facilities are to be applied on a smaller scale. The grounding techniques and practices used in the design of the equipment must ensure that the signal reference points or planes internal to the equipment can be properly interfaced with those of other equipments and those of the facility as a whole without compromising the signal ground system of either the individual unit or the total system.

A basic signal ground point or plane is an important requirement for reliable, interference-free equipment operation. Unfortunately, the ideal ground plane does not exist and some difference of potential will always exist between different ground points. The following sections present techniques and procedures for minimizing this potential difference in both lower and higher frequency equipments.

3.2.1.1 Lower Frequency Equipment.

3.2.1.1.1 Signal Ground Network Configuration. Equipment shall be manufactured with a single-point, signal ground network in lower frequency equipments, i.e., equipment operating at 30 kHz or less. Isolate the lower frequency signal reference points and planes established internal to the equipment from the equipment case.* (The functional requirements of the internal circuitry of the equipment will determine the actual methods and techniques which must be used in establishing the individual reference points and planes. Because of the wide variability of design requirements, the final selection must be left to the individual designer. The designer should become thoroughly familiar with the fundamental design principles contained in Volume I, Chapters 5 and 6.)

3.2.1.1.2 Signal Ground Terminals.

a. Equipment shall be manufactured with an insulated signal ground terminal on each equipment case as illustrated by Figure 3-l to provide a path for interconnecting the signal reference inside the equipment to the facility lower frequency ground network.

b. The ground terminals can be a pin in a connector, a screw or pin on a terminal strip, an insulated wire or an insulated stud, a jack, or a feedthrough. If an insulated wire is used, it should be at least No. 16 AWG copper or larger to provide adequate mechanical strength; for No. 16 AWG, its length should not exceed 1.5 meters (5 feet). If a longer ground wire is required in order to connect to the lower frequency signal ground network in the facility, the size of this wire should be increased. To determine the necessary wire size, first compute its required cross-sectional area from:

Required area in circular mils = Length required in running feet x 500 cmil per foot.

Using either Table 5-1 in Volume I or a standard wire table, determine the standard AWG size having the required (or larger) cross-sectional area. For example, assume the required wire length is 3 meters (10 feet). The minimum necessary cross-sectional area is then

10 ft x 500 cmil/ft = 5000 cmil.

*Common battery systems typically are designed with the signal ground connected to chassis or cabinet ground which is also connected to one of the dc supply buses. It is recommended that such systems be isolated from the structure and from the racks and cabinets of other lower frequency equipments and systems. All interfaces between common battery systems and other equipments and systems should be balanced. Shield grounding must be controlled to ensure that the desired isolation be maintained.

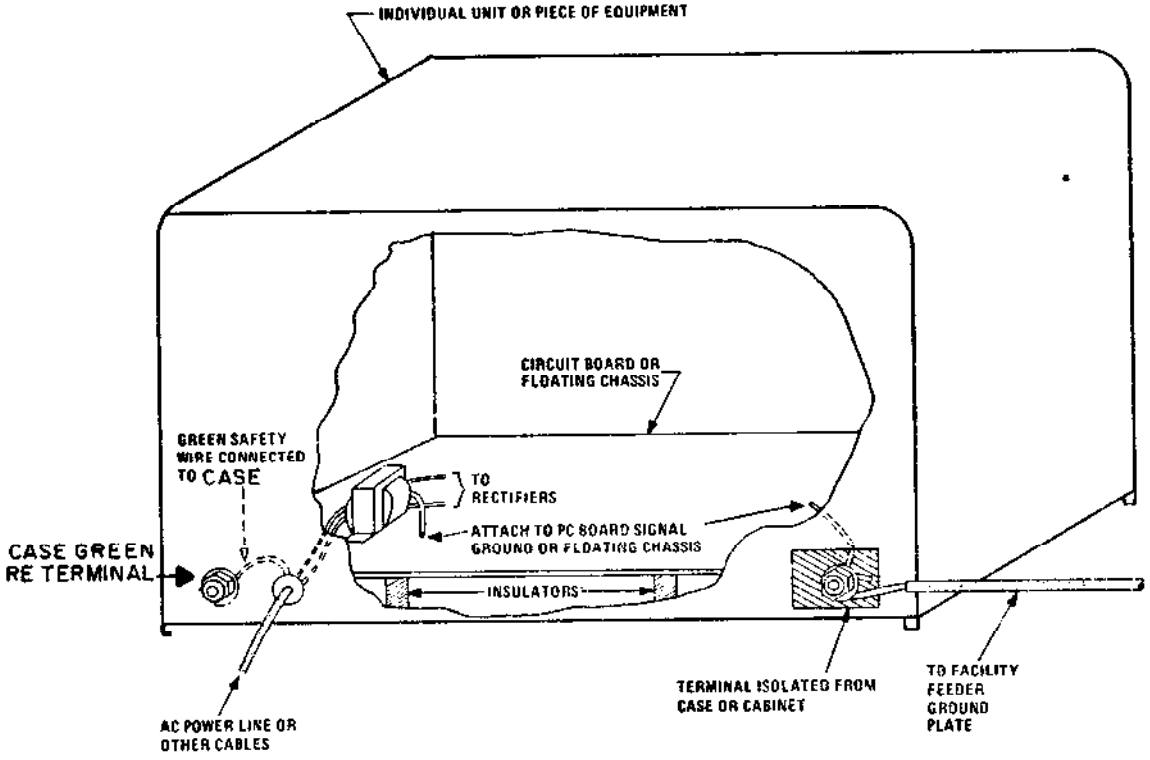

Figure 3-1. Grounding in Lower Frequency Equipment

The wire tables show that No. 13 AWG wire has a cross-sectional area of 5,178 circular mils and could be used. However, No. 12 AWG is more commonly available and would probably be used instead.

c. Where an insulated ground wire penetrates a metal sheet such as the equipment case, adequate physical protection must be provided with grommets, plastic sleeves, or other protectors to ensure continuous isolation between the floating chassis and the equipment case or cabinet.

3.2.1.1.3 Color Code. To aid in distinguishing the signal ground terminal from other terminals on the equipment, it should be clearly marked with a permanent yellow label or color code.

3.2.1.1.4 Cabinet Bus Bar.

a. Each rack or cabinet containing two or more separate pieces of lower frequency equipment should have a bus ground installed that is insulated from the rack or cabinet.

b. Connect the signal ground terminal of each unit of equipment with a bonding jumper to the signal ground bus bar in the manner illustrated in Figure 3-2. To provide adequate mechanical strength and a low impedance path, a broad, flat copper or aluminum strap should be used between the signal ground bus bar and the signal ground terminal on each unit of equipment. A copper wire, No. 16 AWG or larger, may also be used. This bonding jumper must be insulated or otherwise kept from contacting either the equipment case, the rack or the cabinet.

3.2.1.1.5 Isolation.

a. The signal ground network in lower frequency equipments must be designed and installed to provide complete electrical isolation between this ground network and the equipment case (see Figure 3-1). For example, the signal grounds on printed circuit boards must not be connected to the chassis. On the other hand, if the designer determines that the metal chassis can be used as a signal reference for the lower frequency circuits without creating interference problems, and it is desirable to do so, the chassis then must be floated from the equipment case through the use of insulating spacers or standoffs. Care must be exercised in the mechanical layout of the equipment to insure that screws and fasteners do not compromise this isolation.

b. Controls, readout and indicating devices, fuses and surge protectors, monitoring jacks, and signal connectors must be installed in ways that do not compromise this isolation. Both sides of the ac power line must be isolated from the lower frequency signal ground and from the equipment case. Only transformer-type power supplies should be used; the commercial ac/dc practice should never be used. The metal portions of equipments exposed to human contact must be grounded with the green safety wire.

c. To verify that this isolation is maintained, measure the resistance between the equipment's ground terminal and the case, between the rack ground bus and the rack frame, and between each side of the ac power line and the equipment case. Each of these measurements should show a high (> 1 megohm) resistance. Before making these tests, be sure power lines are not connected and all interfacing cables are disconnected.

3.2.1.1.6 Signal Interfacing.

a. The preferred method of interfacing lower frequency equipments is to use balanced lines. All signal inputs and outputs should be balanced with respect to the signal ground; the signal paths between such equipments should employ balanced, shielded, twisted pair lines in the manner illustrated in Figure 3-3. The twisting should be as tight as feasible with 18 twists per foot (3-1), the desired goal for small wires.

b. Where unbalanced signal lines must be used, the signal return must be grounded at one end or the other, but not both (see Figure 3-4). (Deciding in advance to ground the signal line at only the source (the driving end) or the load (the receiving end) generally leads to implementation problems in complex installations. For example, some equipment will be the load for one signal circuit while being, at the same time, the source for another load as shown in Figure 3-5. In this case, if each line is grounded at the source or at the load, the single-point ground will be compromised. Most modern electronic installations are so complex and widely distributed that even if unbalanced interfaces could be implemented which did not violate the lower frequency signal ground network in the facility, it is improbable that the single-point ground system could be maintained during future equipment additions and modifications.) As a result, the equipment must be designed to have the capability of isolating from ground at either the source or load.

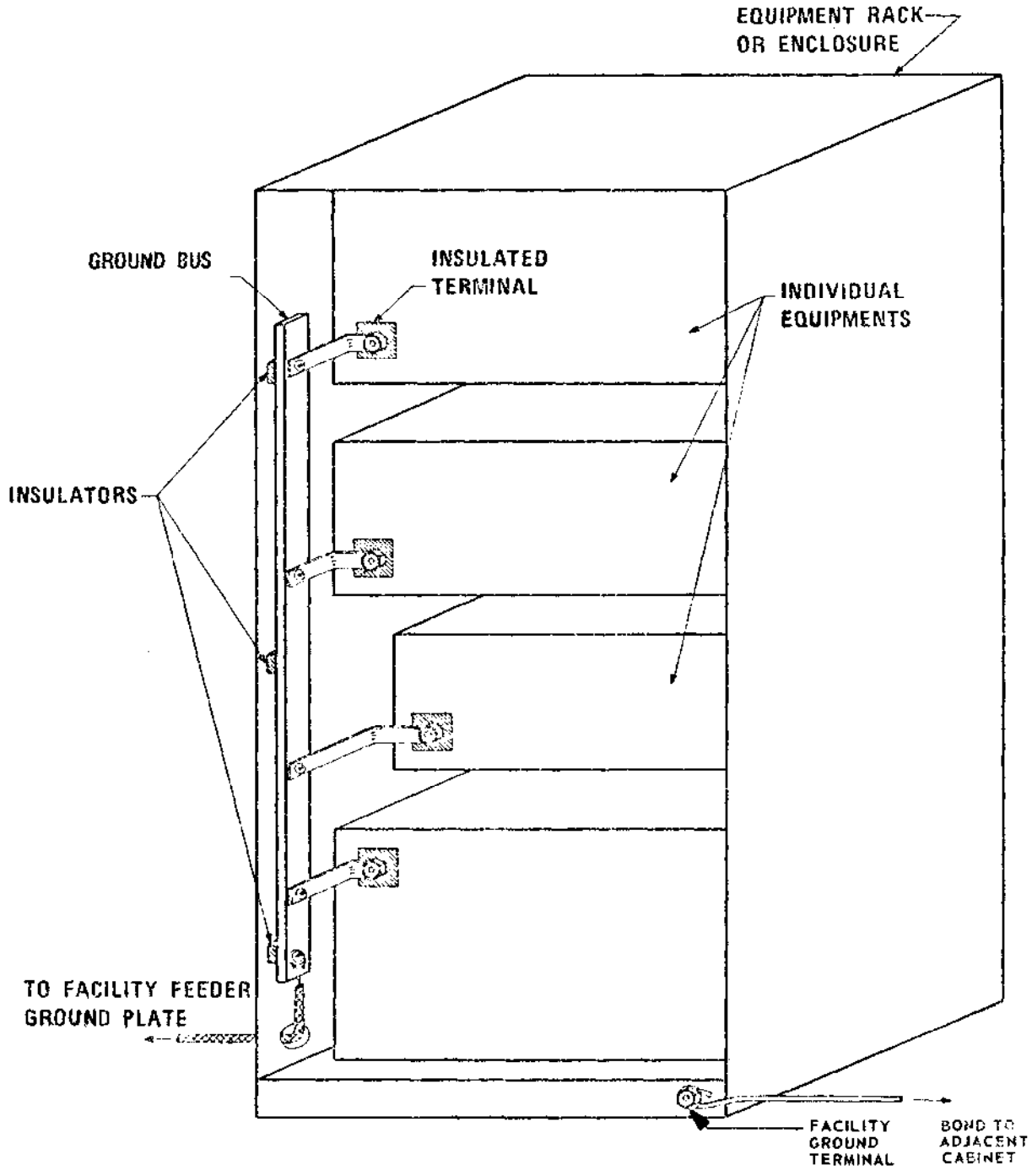

Figure 3-2. Lower Frequency Signal Ground Bus Bar Installation in Rack or Cabinet

3.2.1.1.7 Shield Grounding (Black Only).

a. The shields of lower frequency signal lines should be grounded at only one end to the signal ground network internal to the equipment as shown in Figure 3-3. The ground connection may be made at either the source or the load end (3-2), (3-3), (3-4). In general,

(1) shields of sensitive data lines should be grounded at the load end;

(2) shields of high level* signal lines should be grounded at the source end; and

(3) shields on lines from high impedance dc sources such as strain gauges, thermocouples, etc., should be grounded at the source end (3-5). (Further details on shield grounding for data acquisition systems are given in Section 3.5.2.)

b. All individual shields of lower frequency signal lines within a cable bundle must be insulated from each other to minimize cross coupling. Further, these individual shields must be isolated from the overall bundle shield, equipment chassis and enclosures, junction boxes, conduit, cable trays, and all other elements of the facility ground system. When cables are long, extra attention must be directed toward maintaining the isolation of the individual shields at the ungrounded end and at all intermediate connectors throughout the cable run.

c. At terminating equipments, the shields of individual lower frequency signal lines may be carried into the case or cabinet on separate pins or may be grounded together to be carried in (or out) on a common connector pin, depending upon the characteristics of the equipment involved. If the common pin arrangement is used, it must not compromise the single-point grounding principle. It is advisable to use one pin for low level signal shields with a different pin used for high level signal lines. These individual shields should be terminated to the lower frequency signal ground network. See g through i below for overall shield grounding.

d. The pigtail between the shield breakout and the connector pin should be as short as physically practical.

e. In multiconductor cables some of the individually shielded signal lines will be grounded at one end while other shields will be grounded at the other end. Careful attention must be given to the installation of such cables to prevent grounding of shields at both ends.

f. If pickup or radiation problems arise because the shield is longer than $\lambda/10$ at critical frequencies (see Volume I, Section 6.2.2.4), the shield may be divided into segments in the manner illustrated in Figure 3-6. Each shielded section should be grounded at one end only.

---

*High level versus low level is a matter of degree and will depend upon the characteristics of the particular system under consideration. A suggested rule of thumb is that if the voltage levels of two signals differ by a factor greater than 10 to 1, then the larger should be treated as high level relative to the smaller.

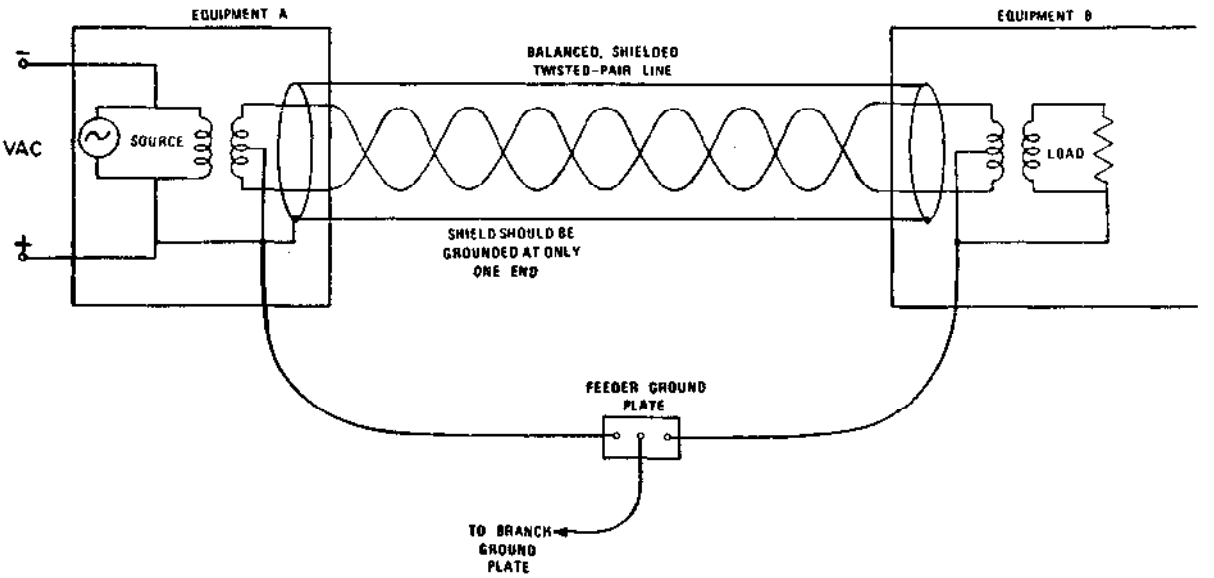

(a) COMMON BATTERY SYSTEM

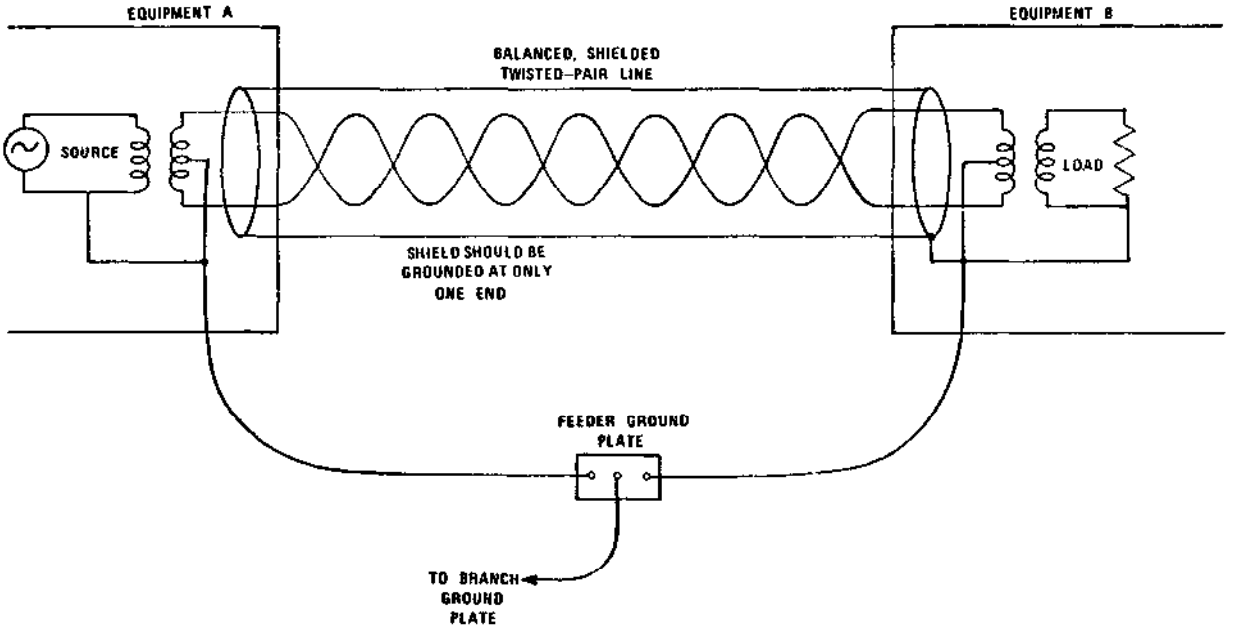

(b) CONVENTIONAL SYSTEM

Figure 3-3. Use of Balanced Lines to Avoid Ground Loops

g. Multiconductor cables which contain unshielded or individually shielded wires, or both, frequently have an overall shield provided for both physical protection and to provide supplemental electromagnetic shielding. Such overall shields should be grounded at each end of the cable run to provide a continuous rf shield with no breaks.

h. For long cable runs where the cable is routed through one or more intermediate connectors, the overall shield should be grounded to the frame or case of junction boxes, patch panels, and distribution boxes along, the cable run.

i. For maximum shielding effectiveness, the overall shield should be effectively bonded as shown in Figures 3-7 and 3-8 with a low impedance connection to the equipment case, enclosure wall, or other penetrated (metal) shield. The best way to bond the overall shield to a connector is to run the shield well inside the connector shell and provide clean metal-to-metal circumferential contact between the shield and the shell. If the connector is not involved, shortest practical lengths of connecting strap or jumper should be used.

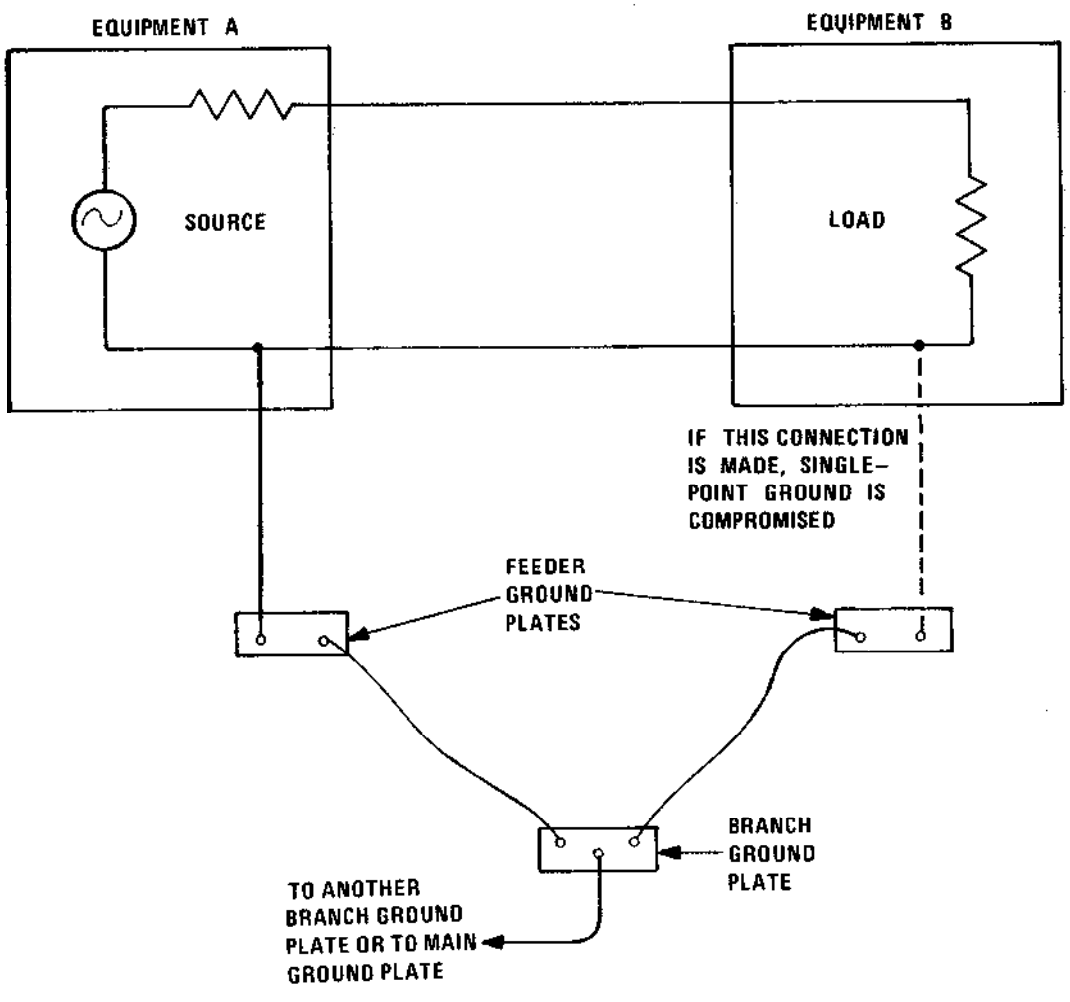

Figure 3-4. Effect of an Unbalanced Cable on the Single-Point Ground

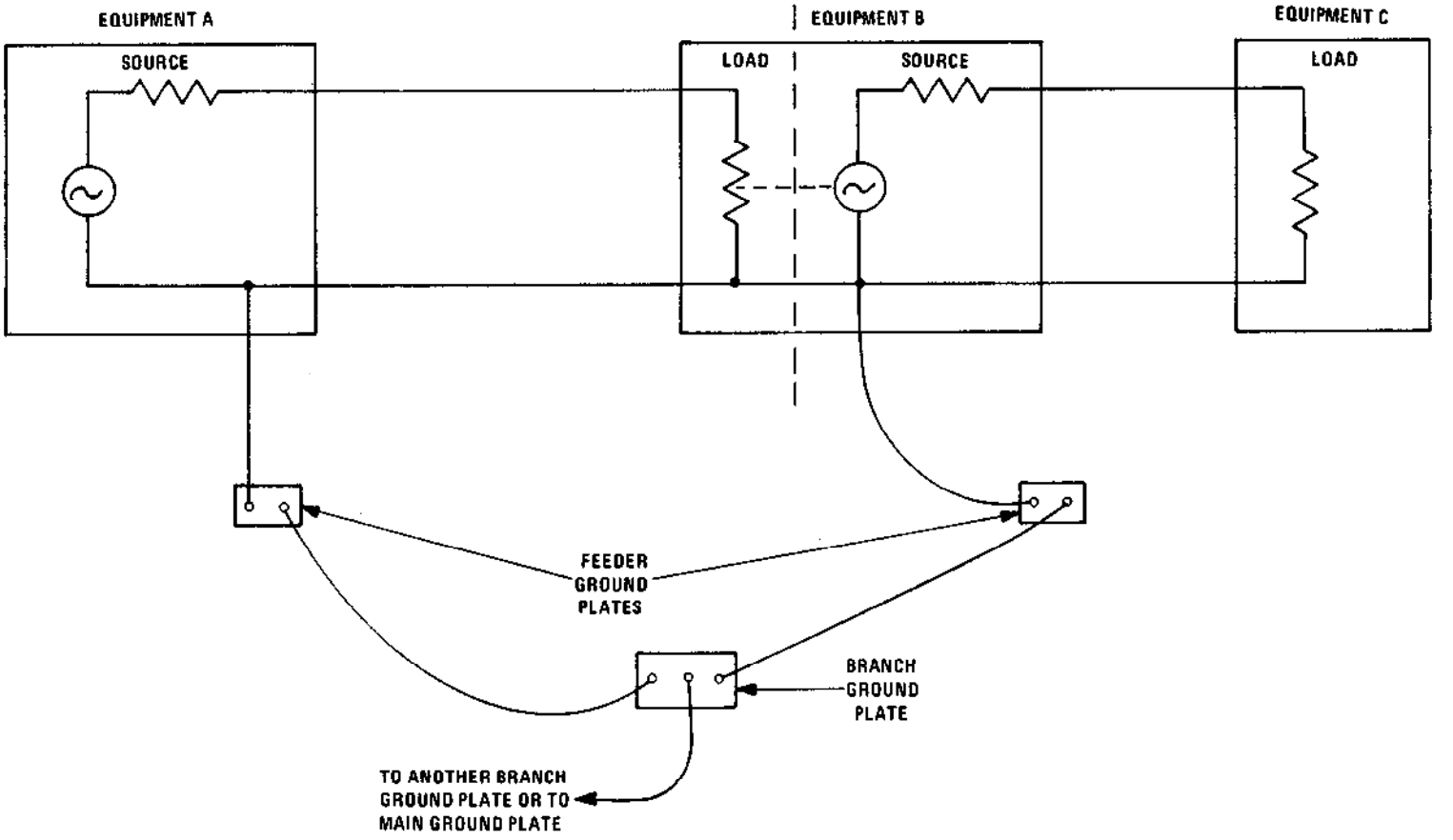

Figure 3-5. Effect of Arbitrarily Grounding the Source End of Unbalanced Equipment Interconnecting Cables

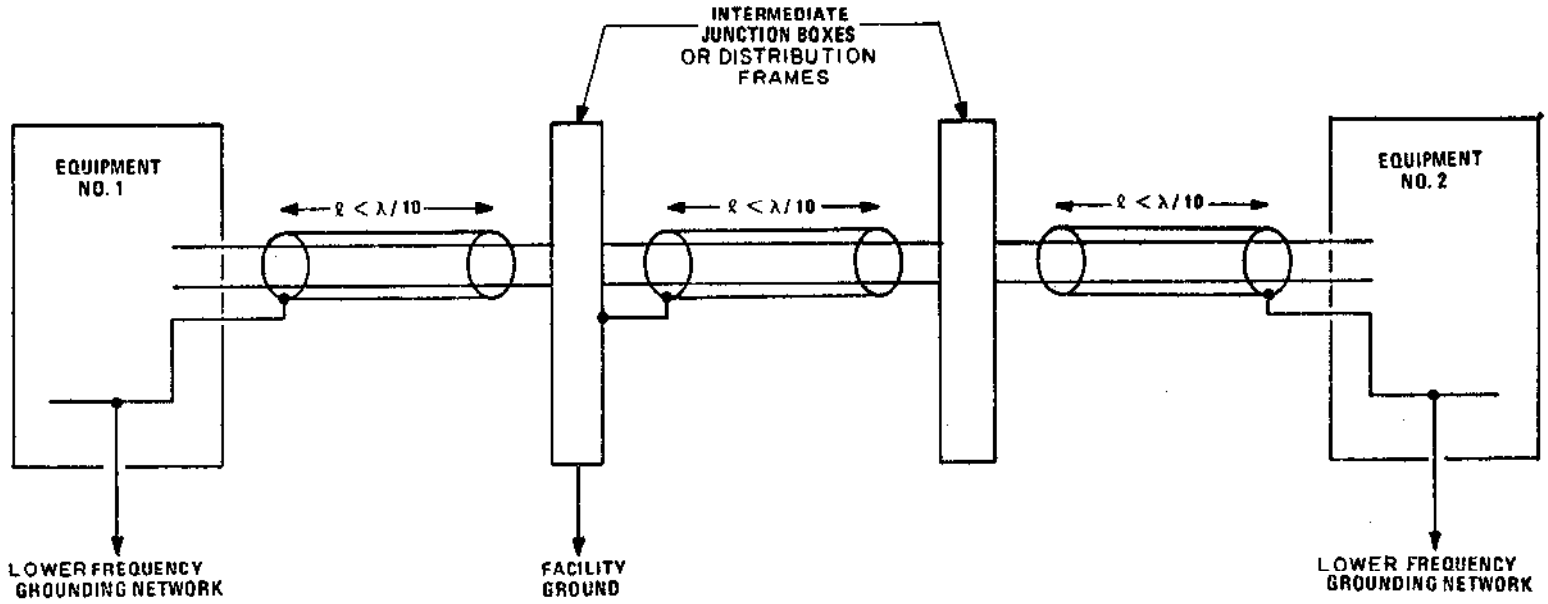

NOTE: Individual shields may be grounded at either end.

Figure 3-6. Method of Grounding the Individual Shields on Long Lower Frequency Shield Cables

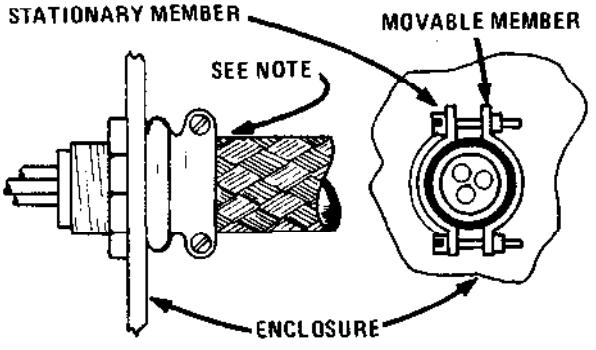

(a) BOX CONNECTOR

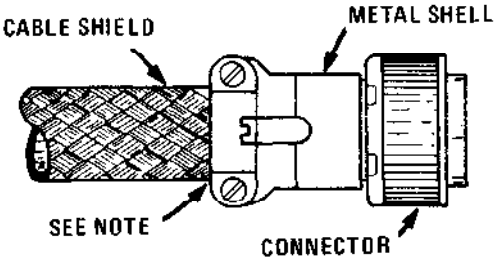

(b) GROUNDING OF MULTI–PIN CONNECTOR

NOTE: INSURE THAT CABLE SHIELD IS CLEAN AND THAT SECURING CLAMP IS TIGHTENED TO PROVIDE A GOOD GROUND.

Figure 3-7. Grounding of Overall Cable Shields to Connectors

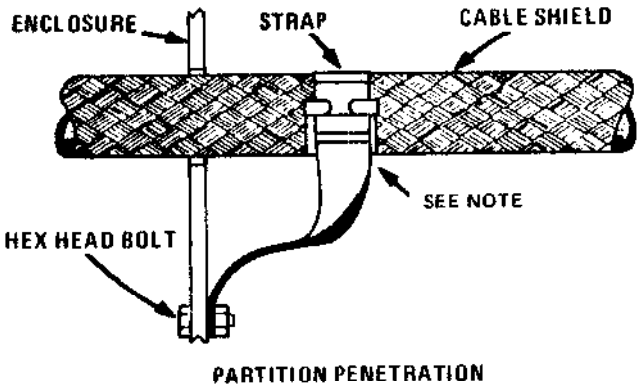

NOTE: INSURE THAT CABLE SHIELD IS CLEAN AND THAT SECURING CLAMP IS TIGHTENED TO PROVIDE A GOOD GROUND.

Figure 3-8. Grounding of Overall Cable Shields to Penetrated Walls

3.2.1.2 Higher Frequency Equipment. In higher frequency equipments, multiple-point equipotential grounding is required. The various signal pairs internal to the equipment are referenced as required to a metallic common or equipotential ground plane with minimum length conductors. The equipment chassis is normally used as the signal reference plane. The equipment chassis is grounded through the case or cabinet to the equipotential ground plane. Yellow covered wire or cable of adequate size should be employed for all interconnections of the higher frequency signal reference network.

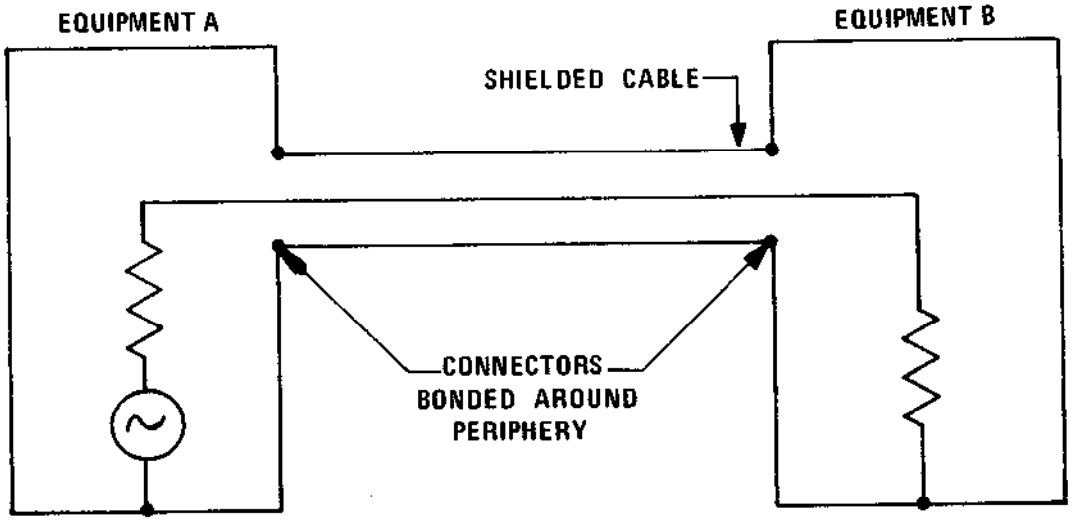

Figure 3-9. Establishment of Shield Continuity Between Higher Frequency Equipments

3.2.1.2.1 Signal Interfaces. For higher frequency signals, the interfacing lines between equipments may be unbalanced, constant impedance, transmission lines such as coaxial cables. The current return conductor, e.g., the shield in the case of a standard coaxial cable,* should be grounded to the equipment enclosure at both ends of the cable and at intermediate points along the cable run. (This multiple-point grounding of the shield maintains the rf shielding effectiveness of the cables and simplifies equipment design.)

3.2.1.2.2 Cable Connectors. Cable connectors must have less than one milliohm contact resistance to provide a low impedance path between the cable shield and the equipment case on which the connector is mounted. Bond the shield completely around its periphery of the cable to the connector shell with a tight compression or soldered bond. Soldered connections are preferred over clamps. Higher frequency shield terminations must maintain the rf-tightness of the interconnected system (see Figure 3-9).

*In low level, wideband (particularly video) systems, noise voltages arising from stray power currents (or from currents induced in cable shields by incident rf fields, i.e., the antenna effect), flowing through the cable shield can be troublesome. A way to combat the rf pickup problem is to, in effect, enclose the shield carrying the signal return current inside of another shield or use a balanced type of transmission line. To accomplish the first of these alternatives, either a triaxial type cable can be used or the coaxial cable can be routed in metallic conduit. The inner shield of the triaxial cable or the shield of the conduit-protected coaxial cable should be terminated to the signal ground on the inside of the equipment. The outer shield of the triaxial cable and the conduit should be peripherally bonded to the case or cabinet of the terminating equipments. If the interference is the result of stray power currents, the current path through the shield must be interrupted or a twinaxial type of cable must be used. To interrupt the path for stray power currents, the system's signal reference must be connected to structure at only one end. Thus, either the source or load end signal reference must be isolated from structure and the ac ground. The isolation can be effected either by floating the equipment or its internal circuitry. Generally, however, either process is very difficult to implement and maintain and it is preferable to resort to a balanced interface or locate the source and reduce the magnitude of the stray current.

3.2.1.3 Equipments Containing Both Lower and Higher Frequency Circuits. Some types of equipment will necessarily contain both lower and higher frequency signal circuits in the same equipment case because of specific design or operational requirements. (For example, a typical VHF or UHF receiver will require both a higher frequency input from the antenna and a lower frequency output to audio or IF amplifiers as illustrated in Figure 3-10.) If the lower and higher frequency circuits are functionally independent and can be separated, the lower frequency signal ground should be designed and installed in accordance with Section 3.2.1.1 and the higher frequency signal grounds should conform to Section 3.2.1.2.* However, in equipments where both lower and higher frequency circuits must share a common signal ground because of design or construction requirements, both signal circuits should be grounded as in higher frequency equipments. The higher frequency interfaces to all transitional type equipment should be constant impedance, shielded lines with the shield grounded around its periphery to the chassis or cabinet. The lower frequency interfaces may be shielded, and should be balanced, twisted pair lines, as illustrated in Figure 3-10, with the shield grounded at one end only.

3.2.2 Fault Protection. Connect each unit or piece of electrical and electronic equipment and all exposed conductive parts to other nearby conductive objects, such as the building structural steel, to prevent hazardous voltages from existing on the equipment relative to its surroundings. Also, ground each equipment to the earth electrode subsystem through a low impedance path to provide a return path for fault currents back to the ac distribution transformer.

a. Ground exposed noncurrent-carrying metal parts of electrical and electronic equipment for fault protection in accordance with the requirements of MIL-STD-188-124A.

b. Convenience outlets which are provided as an integral part of a piece of equipment must be grounded in accordance with the NEC. Connect the ground terminal of the receptacle in such outlets to the equipment case, racks, or cabinet in which the outlet is mounted with a ground conductor equal in size to the green wire specified by the NEC. (This ground conductor is to be installed in addition to any grounding connection made by the yoke of the receptacle.)

c. The ground terminal of all convenience outlets and plugmolds provided with the equipment or equipment cabinet shall be connected to the fault protection subsystem via the grounding (green) wire. In addition, the green wire shall be connected to the equipment case and rack. The size of the conductor shall be in accordance with Table 1-21 or Article 250 of the National Electrical Code. Wire mold or plugmold strips and convenience outlets which depend upon serrated fingers for ground shall not be used.

d. Accessible conductive extensions from each equipment must be grounded to the equipment case to prevent such parts from becoming electrically energized in case of a power line fault or component failure. For example, metal control shafts must be grounded with close-fitting gaskets, with metal finger stock, or through the mounting hardware.

---

*At facilities where lower frequency equipments are installed over the equipotential plane, the single-point ground should be connected to the equipotential plane.

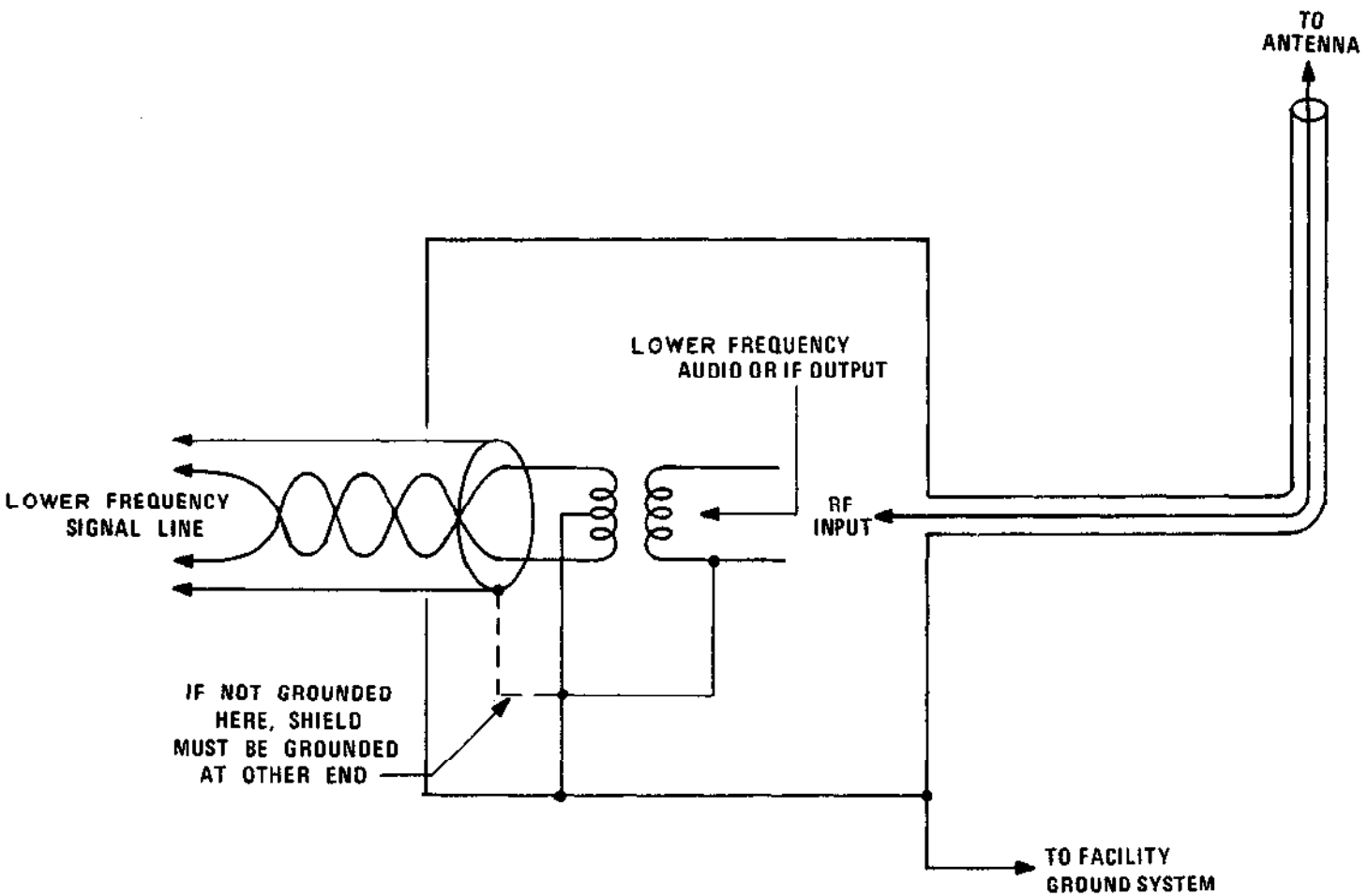

Figure 3-10. Grounding Practices in Equipments Containing Both Higher Frequency and Lower Frequency Circuits

e. The ac neutral, i.e., the white wire, must not be connected to any noncurrent-carrying metal parts of the equipment. (This restriction means that the use of ac/dc type of power circuit design is prohibited and that a power transformer is required for each equipment or subsystem.)

3.2.3 Cabinet Grounding. The case or cabinet of each individual unit or piece of equipment must be electrically bonded to the cases of other nearby equipments and to the nearby equipotential plane or fault protection subsystem to minimize noise voltages produced by stray currents.

a. Each unit or piece of equipment that is not rack mounted should have its case or enclosure connected to the nearest point on the equipment ground network with a low resistance ground cable. To ensure that this ground cable has a sufficiently low resistance, the size of the ground cable should provide at least 2000 cmil per running foot. To determine the necessary wire size, first compute its required cross-sectional area from:

Required area in circular mils = Bun length in feet x 2000 cmil per foot.

Using either Table 5-1 in Volume I or a standard wire table, determine the standard AWG size having the required (or larger) cross-sectional area. For example, assume the run length is 20 feet. The minimum necessary cross-sectional area is then

20 ft x 2000 cmil/ft = 40,000 cmil.

The wire tables show that a No. 4 AWG wire has a cross-sectional area of 41,740 circular mils and should be used for a run of 20 feet.

b. If the equipment is mounted in a rack, frame, or cabinet, the equipment case must be directly bonded to the rack, frame, or cabinet in accordance with the recommendations of Section 3.3. The rack, frame, or cabinet must then be grounded to the nearest point on the fault protection subsystem within the facility with a ground conductor providing 2000 cmil per running foot. Figure 3-11 provides a typical equipment cabinet grounding detail.

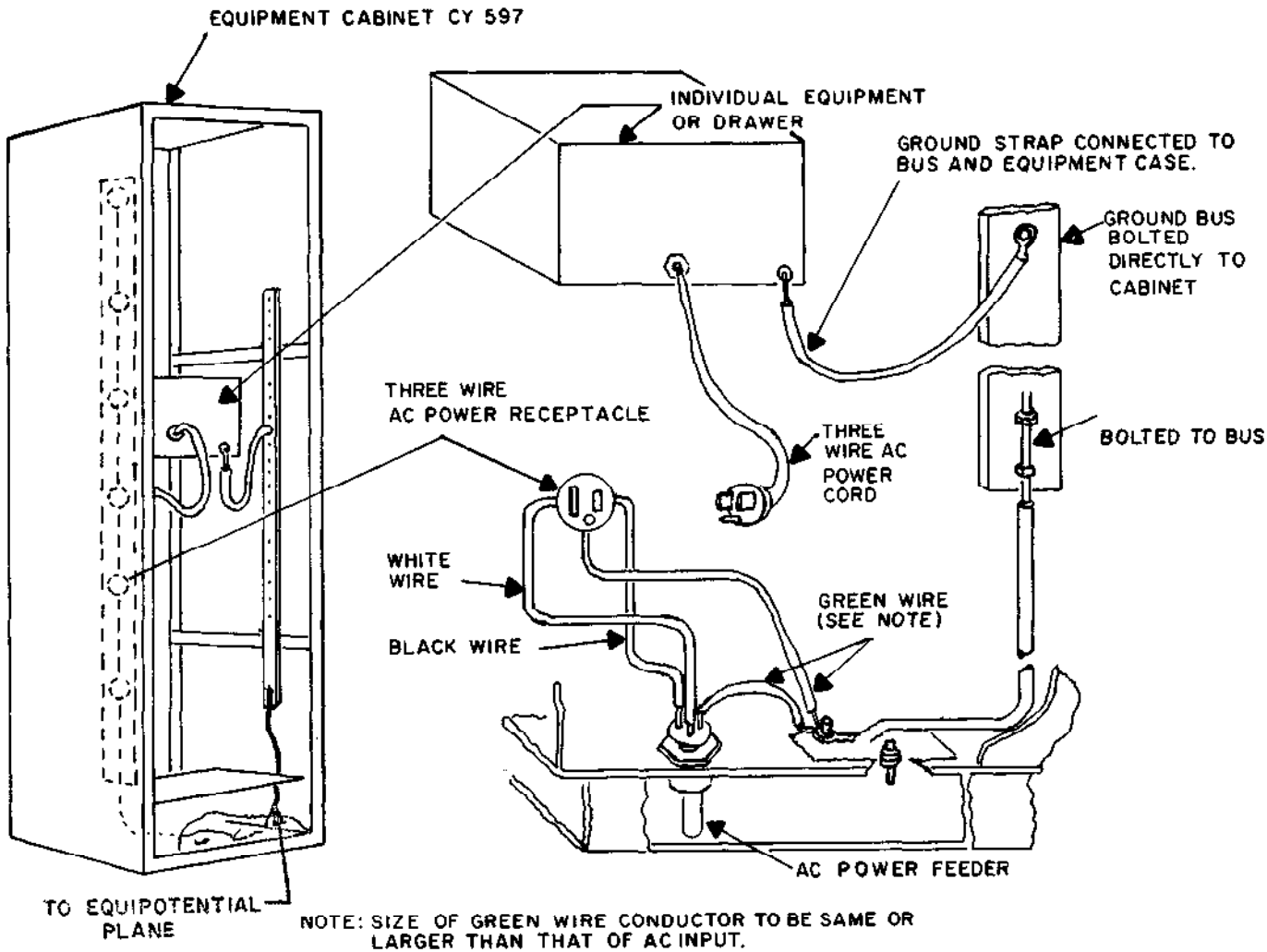

Figure 3-11. Typical Equipment Cabinet Grounding Detail

3.3 BONDING PRACTICES. Equipment emission and susceptibility requirements for proper system operation should be accomplished with the most cost-effective combination of interference reduction techniques. Bonding is an essential element of the interference control effort. This section presents design and construction guidelines to aid in the implementation of effective bonding of equipment circuits, equipment enclosures, and cabling. These guidelines are not intended as step-by-step procedures for meeting EMC specifications. Rather they are aimed at focusing attention on those principles and techniques which lead to increased compatibility between circuits, assemblies, and equipments.

a. Welded seams should be used wherever possible because they are permanent, offer a low impedance bond, and achieve the highest degree of rf tightness.

b. Spot welds may be used where rf tightness is not necessary. Spot welding is less desirable than continuous welding because of the tendency for buckling and the possibility of corrosion occurring between welds.

c. Soldering should not be used where high mechanical strength is required. If mechanical strength is required, the solder should be supplemented with fasteners such as screws or bolts.

d. Solder must not be used to form bonds which may be reasonably expected to carry large currents, such as those produced by power line faults or lightning currents.

e. Fasteners such as bolts, rivets, or screws should not be relied upon to provide the primary current path through a joint.

f. Rivets should be used primarily to provide mechanical strength to soldered bonds.

g. Sheet metal screws should be used only for the fastening of dust covers on equipment or for the attachment of covers to discourage unauthorized access by untrained personnel.

h. Bonds that can not be made through direct metal-to-metal contact must use auxiliary straps or jumpers. The following precautions should be observed when employing bonding straps or jumpers (see Figure 3-12):

(1) Jumpers should be bonded directly to the basic structure rather than through an adjacent part.

(2) Jumpers should not be installed two or more in series.

(3) Jumpers should be as short as possible.

(4) Jumpers should not be fastened with self-tapping screws.

(5) Jumpers should be installed so that vibration or motion will not affect the impedance of the bonding path.

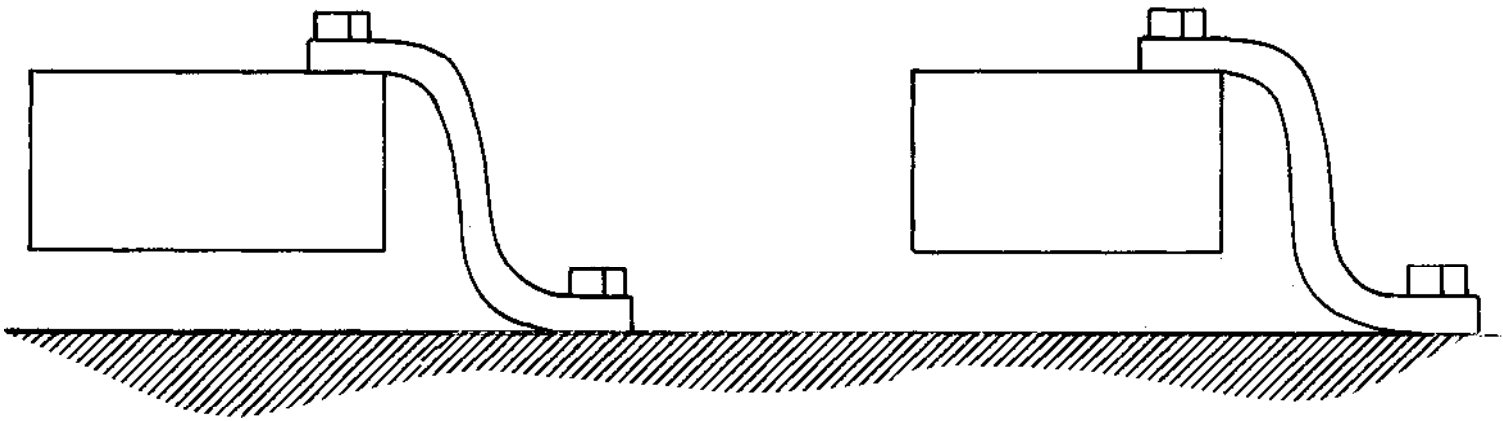

(a) ACCEPTABLE USE OF BONDING JUMPERS

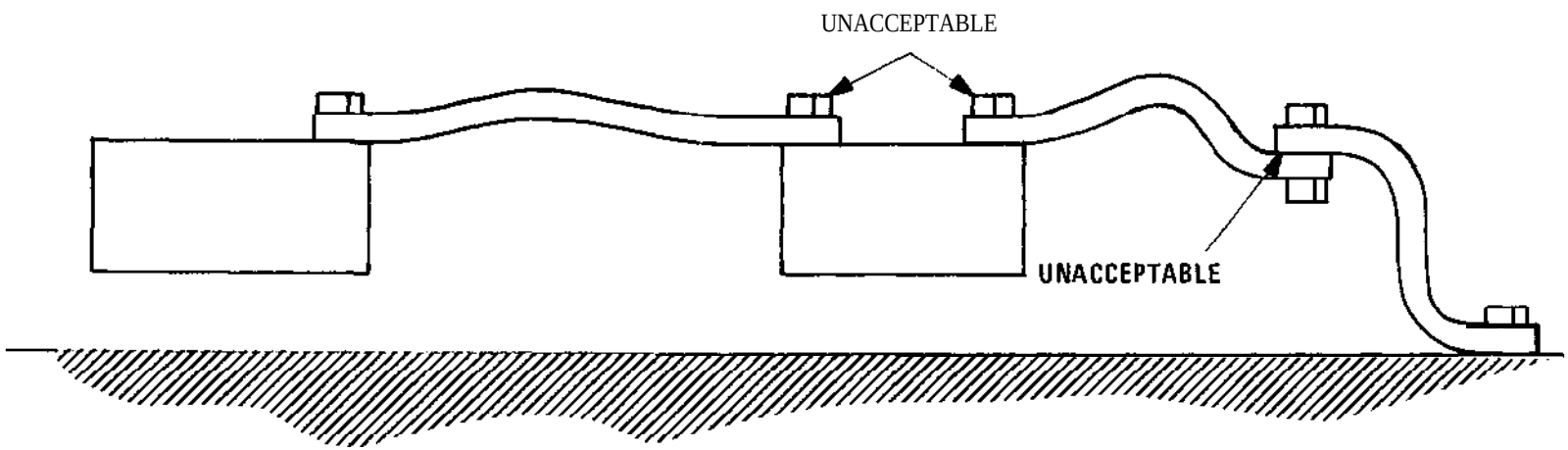

(b) UNACCEPTABLE PRACTICES

Figure 3-12. Acceptable and Unacceptable Uses of Bonding Jumpers

(6) Jumpers should be made of tinned copper, cadmium-plated phosphor bronze, aluminum, or cadmium- plated steel.

(7) Mating metals should be selected to offer maximum galvanic compatibility (see Section 1.7.3).

i. Where electrical continuity across the shock mounts is necessary, bonding jumpers should be installed across each shock mount. Jumpers for this application should have a maximum thickness of 0.06 cm (0.025 in.) so that the damping efficiency of the mount is not impaired. In severe shock and vibration environments, solid straps may be corrugated or flexible coarse wire braid may be used.

j. Where rf tightness is required and welded joints can not be used, the bond surfaces must be machined smooth to establish a high degree of surface contact throughout the joint area. Fasteners must be positioned to maintain uniform pressure throughout the bond area.

k. Chassis-mounted subassemblies should utilize the full mounting area for the bond as illustrated in Figures 3-13 and 3-14. Separate jumpers should not be used for this purpose.

l. Equipments attached to frames or racks by means of flange-mounted quick disconnect fasteners must be bonded about the entire flange periphery as shown in Figure 3-15. Both the flange surface and the mating rack surface must be cleaned over the entire contact area.

m. Rack-mounted packages employing one or more dagger pins should be bonded as shown in Figure 3-16.

n. The recommended practices for effective bonding of equipment racks are shown in Figure 3-17. Bonding between the equipment chassis and the rack is achieved through contact between the equipment front panel and the rack front brackets. These brackets are bonded to the horizontal slide which is in turn arc welded to the rack frame. The ground stud at the top of the rack is used to interconnect the rack structure to the facility ground system.

o. Where hinges are used, establish an alternate electrical path through the use of thin, flexible straps across the hinges as shown in Figure 3-18.

p. Standard MS-type connectors and coaxial connectors must be bonded to their respective panels over the entire mating surfaces as illustrated in Figure 3-19. Panel surfaces must be cleaned to the base metal for no less than 0.32 cm (1/8 in.) beyond the periphery of the mating connector.

q. In ideal situations cable shields should be bonded to the connector shell completely around the periphery of the shield with either compression or, preferably, soldered bonds.

r. When an rf tight joint is required at seams, access covers, removable partitions, and other shield discontinuities, conductive gaskets should be used. They may also be used to improve the bond between irregular or rough bonding surfaces. Gaskets should be sufficiently resilient to allow for frequent opening and closing of the joint and yet be stiff enough to penetrate any nonconductive films on surfaces.

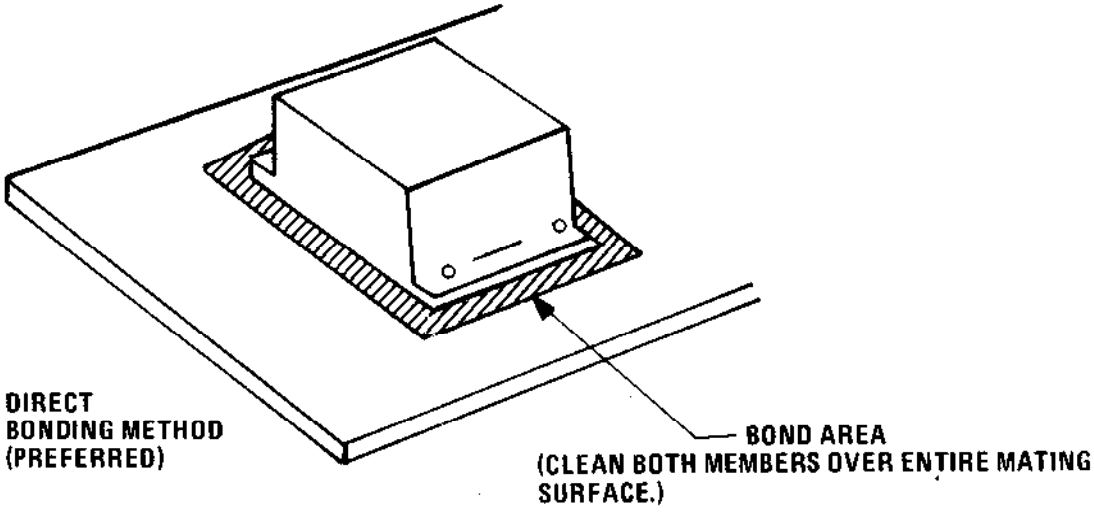

Figure 3-13. Bonding of Subassemblies to Equipment Chassis

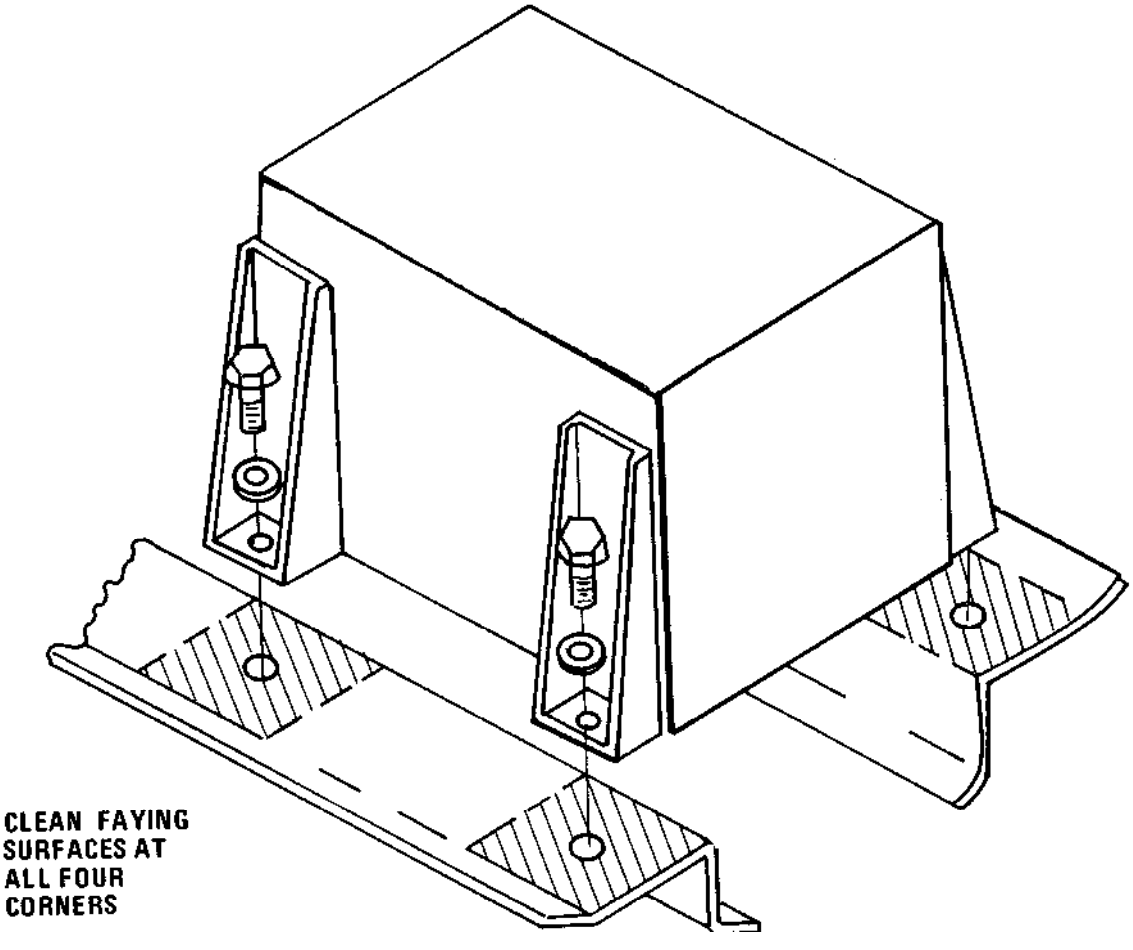

Figure 3-14. Bonding of Equipment to Mounting Surface

s. Gaskets should be firmly affixed to one of the bond members with screws, conductive cement, or any other means which does not interfere with their operation. The gaskets may be placed in a milled slot to prevent lateral movement.

t. All bonds which are not in readably accessible areas must be protected from corrosion and mechanical deterioration. Corrosion protection should be provided by insuring galvanic compatibility of metals and by sealing the bonded joint against moisture (see Section 1.7.3).

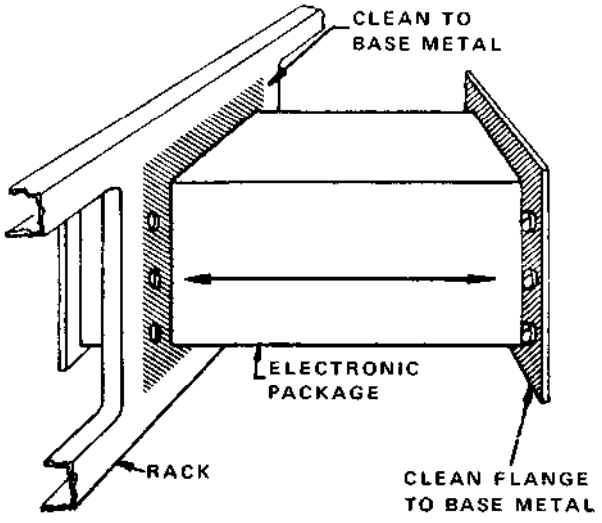

Figure 3-15. Typical Method of Bonding Equipment Flanges to Frame or Rack

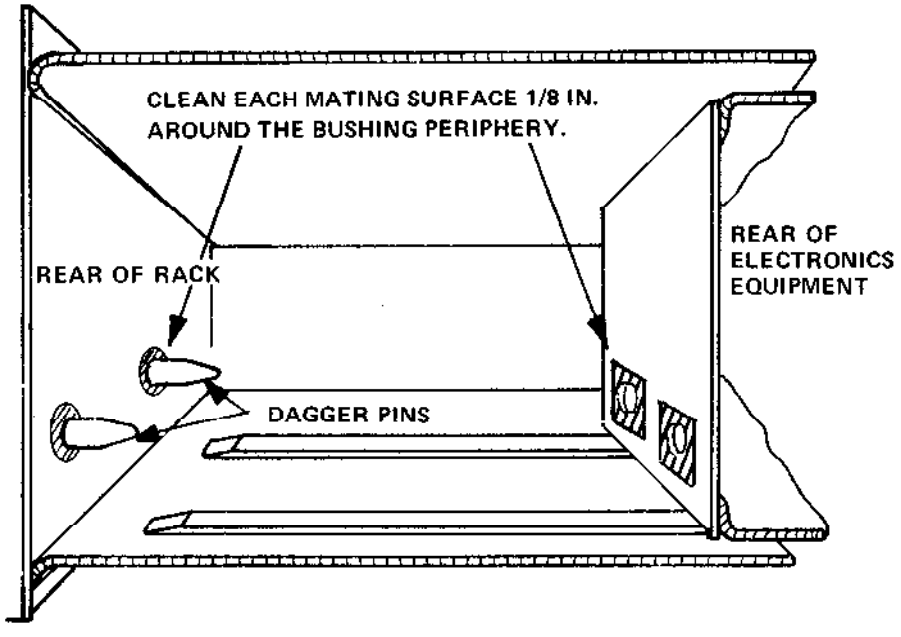

Figure 3-16. Bonding of Rack-Mounted Equipments Employing Dagger Pins

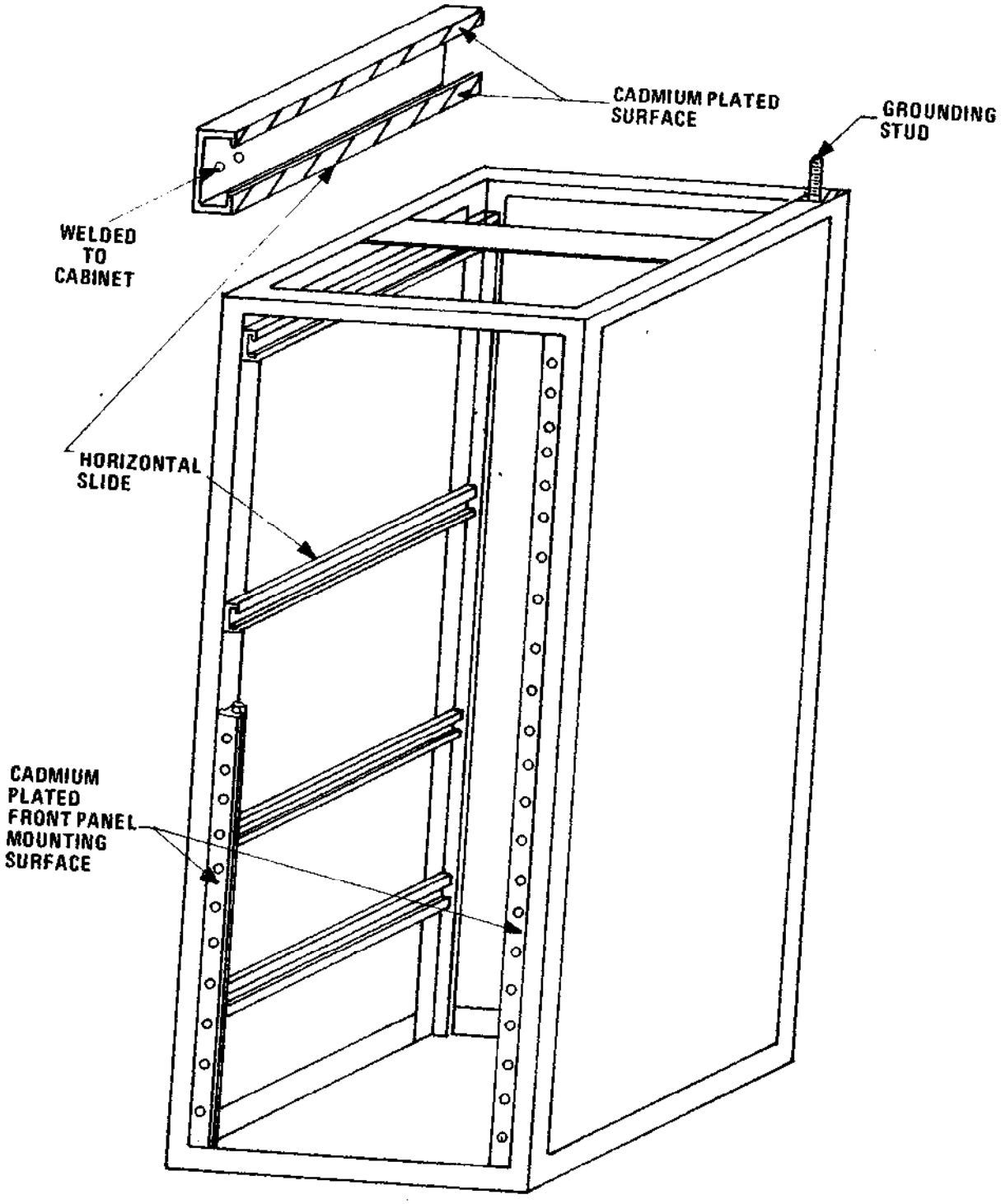

Figure 3-17 Recommended Practices for Effective Bonding in Cabinets

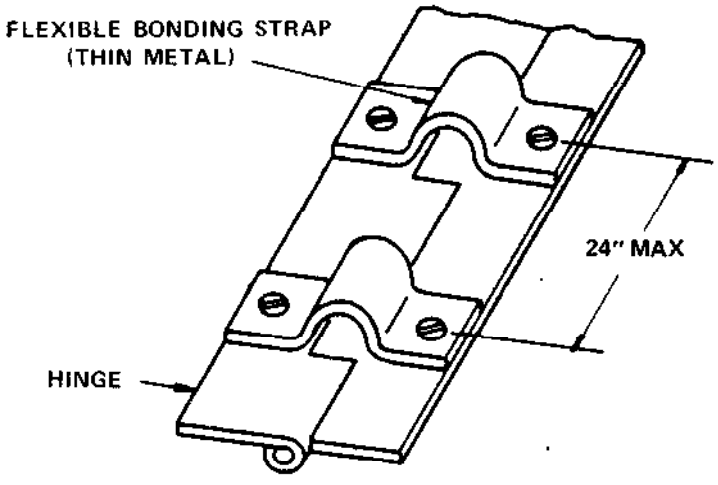

Figure 3-18. Method of Bonding Across Hinges

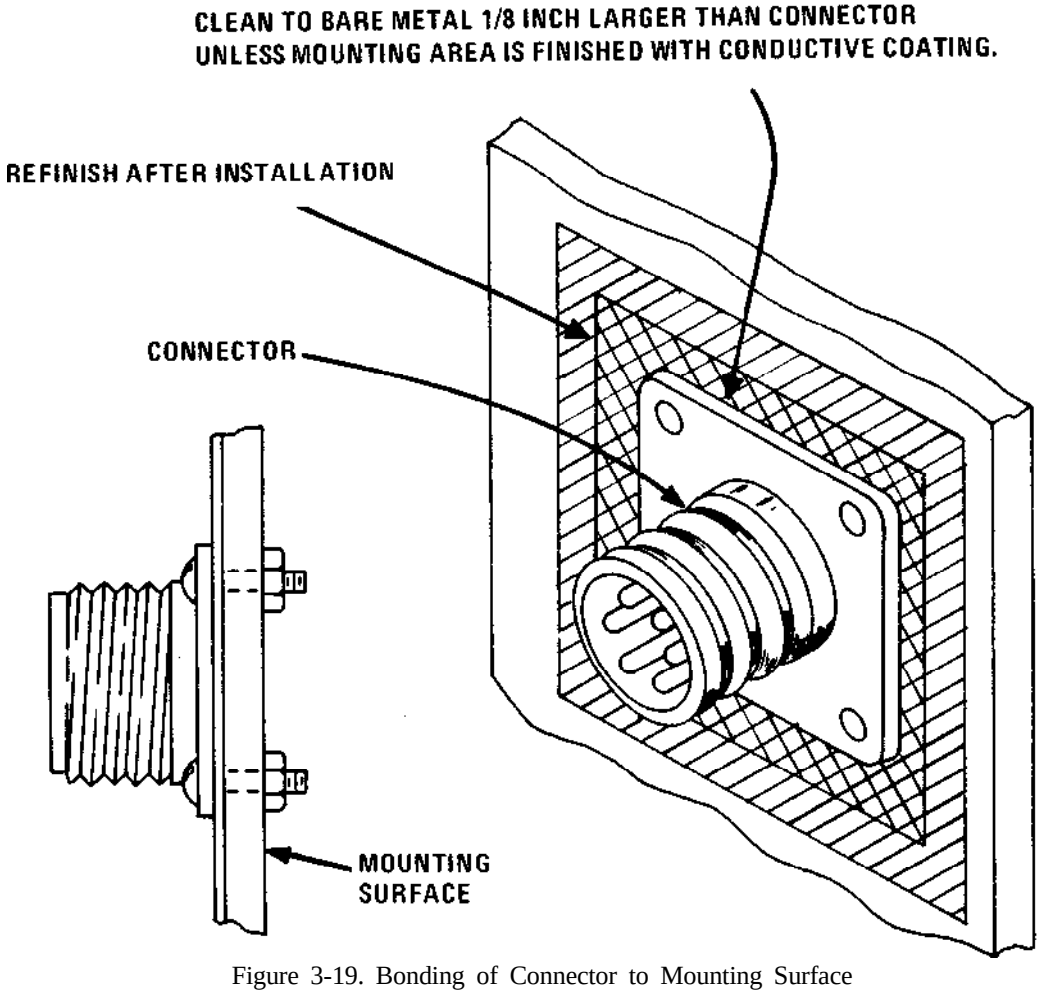

Figure 3-19. Bonding of Connector to Mounting Surface

3.4 SHIELDING GUIDELINES. Even during the circuit design phase of the equipment, shielding requirements should be considered. In this way, electromagnetic compatibility can be achieved during design thus alleviating much of the post-construction retrofit sometimes required for successful operation. A properly designed circuit can be compromised in the transition from a breadboard design to a packaged end item unless appropriate control measures are taken. Thus it is important that components be carefully selected with due regard to their sensitivity characteristics and shielding requirements. Then careful attention must be directed to the installation of these components to either take advantage of their inherent shielding properties or to overcome their shortcomings. In this way, coupling between circuits internal to the equipment and between internal circuits and external emitters or receptors can be controlled. The documentation and design requirements for the control of the electromagnetic emission and susceptibility characteristics of military C-E equipments are provided in MIL-STD-461.

3.4.1 Parts Selection.

a. In circuits where stray coupling may be detrimental, use shielded inductors.

b. Wherever possible, use shielded relays and electrically ground the shield.

c. The input transformer for isolation amplifiers should have electrically shielded primary windings.

d. Power transformers for susceptible circuits should have an electrostatic shield between the primary and secondary windings. This shield and the transformer case should be grounded to the equipment chassis.

e. Use shielded hookup wire for high level leads inside the chassis to prevent interference signals from coupling to other internal leads which extend through the chassis.

f. Select connector types which will provide sufficient pins for individual shield terminations.

g. Select connectors which will be able to withstand environmental conditions without degradation of the shielding characteristics of the connector.

3.4.2 Layout and Construction.

a. Do not place low level signal paths adjacent to high level signal paths or unfiltered power supply conductors.

b. Avoid the use of long parallel conductor runs.

c. Where long parallel runs cannot be avoided, e.g., on “Mother boards,” arrange conductor functions so that they successively progress from the low level, most sensitive leads to the highest level leads. The filtered dc power leads and low rate control functions (potentiometer leads, reference voltages, etc.) may run down the middle.

d. Ensure that excessive conductor parallelism does not occur between adjacent boards.

e. For rf and high speed digital paths, use double-sided board with microstrip transmission lines properly matched to the terminal impedances.

f. Effectively ground large unetched portions of boards and utilize the grounded portions as shields.

g. Consider carefully the positions of transformers and inductors on adjacent boards to assure that undesired magnetic coupling does not occur between circuits.

h. Assign circuit functions on boards following the principle of physically separating the most sensitive networks from the high level or transient producing networks.

i. Arrange or shield magnetic components to avoid interacting stray fields.

j. Orient the winding axes of adjacent transformers at 90° with respect to each other to minimize coupling due to the concentration of leakage flux along the winding axis and, hence, to minimize the required shielding.

k. Exercise care in placing shields close to circuits in which the circuit Q is a critical factor because losses in the shield can lower the circuit Q.

l. Ground any shields on printed circuit boards directly to the main chassis independently of any grounds located on the board.

m. The shields on printed circuit boards must never be used as a circuit return conductor since current flowing in the surface of the shield can result in radiated rf energy.

n. Use modularized construction wherever possible; in particular, place power line input filters in shielded modules.

o. Extreme high and low level stages should be isolated in separate compartments.

p. Circumferentially bond power line filter cases to the chassis. If the surfaces are aluminum, the surfaces should be iridited, never anodized or primed. Mounting ears or studs must exhibit firm and positive contact over the entire area of the mounting surface.

q. Most common lower frequency interference is the so-called "hum" from power conductors and is predominately magnetic. The shielding of a circuit from power frequency interference may require the use of a high permeability magnetic shield completely surrounding the sensitive circuit.

r. Provide for effective electric and magnetic field shielding of the power supplies, battery chargers, dc to ac inverters, and dc to dc converters.

s. High voltage power supplies should be adequately shielded and carefully isolated from highly sensitive circuits.

3.4.3 Equipment Enclosures. The shielding effectiveness of the enclosure depends on the structural material and on the mechanical design, construction, and installation of the equipment. The choice of material depends primarily on the ambient field and on the degree of shielding required (see Volume I, Section 8.3). The main problems with shielding, however, are usually not with the material but with the control of leakage through openings at seams, apertures, and wire penetrations. The following guidelines are suggested as aids toward controlling this high leakage.

3.4.3.1 Seams.

a. Hold mechanical discontinuities to a minimum.

b. Bond equipment enclosures at every seam and discontinuity.

c. Recognize that the poorest electrical joint will determine the shielding effectiveness of the enclosure.

d. Obtain clean metal-to-metal contact at seams to prevent leakage and radiation of energy.

e. Where possible, seams should be welded, brazed, or soldered such that the joint is continuous; however, satisfactory results for some applications can be obtained with closely spaced rivets, spot welding, or nuts and bolts.

f. Provide as much overlap as possible and closely space fasteners to minimize the tendency of the joint to buckle.

g. Ensure that the fastening method exerts sufficient pressure to hold the surfaces in contact in the presence of deforming stresses, shock, and vibrations associated with the normal operation of the equipment in its expected environment.

h. Use gasket or finger stock material where seam unevenness is encountered or where removable panels, drawers, etc., are used. The gasketing material should fill gaps and uneven places to provide continuous electrical contact between the mating surfaces.

i. Attach removable covers and panels with closely spaced screws and apply conductive gasketing around the periphery.

j. Choose gaskets with properties of high resilience and high conductivity.

k. Provide the minimum gasket thickness and width which will allow for the expected surface discontinuities of the joint.

l. Provide the pressure necessary to achieve an rf-tight seam.

m. Mount gaskets in permanent seams as shown in Figure 3-20. The features to be observed in this figure are:

(1) Gasket is bonded to one metallic surface of the seam with conductive adhesive; surfaces are cleansed of nonconductive material before applications.

(2) Metallic surface is machined to smooth finish and all nonconductive materials are removed.

(3) Appropriate mechanical fasteners (i.e., clamps, bolts, etc.) are used to provide a high pressure on the rf gasket. The pressure should be reasonably uniform along the entire length of the seam.

n. Ensure that all rf gaskets are adequately compressed.

o. On hinged side of doors or panels, mount gasket as shown in Figure 3-21(a). if the gasket is mounted in this manner, it receives little or no sliding motion as the door compresses it. Whereas, if the gasket is mounted as shown in Figure 3-21(b), it will be more likely to wear out quickly because of the sliding motion of the door.

p. Ensure that the metal surfaces which mate with gaskets are free of oily film, corrosion, moisture, and paint.

q. Handle finger stock with extreme care and install it in a recessed or inner lip to minimize the possibility of mechanical damage.

r. Carefully maintain the pressure exerted by the spring fingers because this pressure is highly important to the shielding effectiveness of the seam.

3.4.3.2 Penetrations and Apertures. Mechanical and electrical interfaces require that openings exist in the equipment enclosure. Since each interface degrades the shielding effectiveness of the enclosure, the selection and implementation of techniques to provide continuity at these interfaces are important. Figure 3-22 illustrates both good and bad practices.

a. Mount filters for power and control cables inside the shield and extend the filter input terminals through the shield.

b. Metal control shafts extending through an enclosure should be grounded with metallic fingers, a grounding nut, or an rf gasket. An alternative to the grounded metal shaft is a nylon, teflon, or other dielectric shaft inserted in a waveguide-below-cutoff cylinder as illustrated in Figure 3-23.

c. Keep holes for ventilation or drainage of moisture small in effective electrical area to avoid decreasing the shielding efficiency. A "small" hole is one which is small in dimension compared to the operating wavelength. Larger holes should be covered by a fine mesh copper screen, or alternately, a series of small holes may be used.

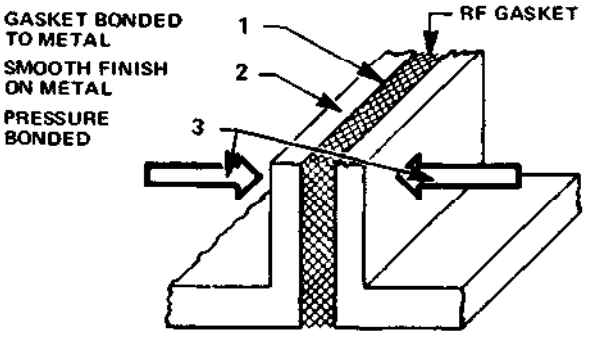

Figure 3-20. Method of Making Permanent Seam Using a Gasket

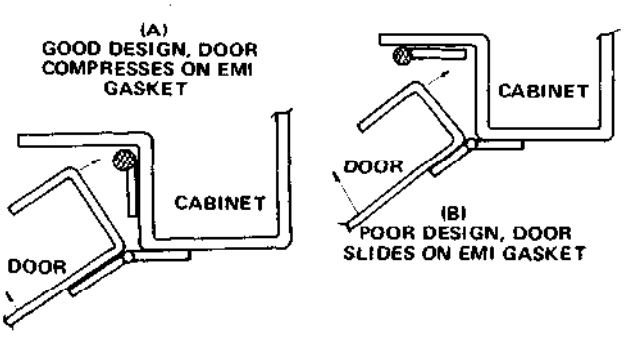

Figure 3-21. Mounting of Gasket on Hinged Side of Equipment Doors and Panels

d. Design equipment enclosures that require large inlet and/or outlet apertures to include suitable shielding such as honeycomb placed over the aperture. Table 3-1 lists typical cutoff and recommended usable frequencies of standard honeycomb cell sizes. Shielding may also be provided by layers of copper screening with an attendant lower shielding effectiveness and higher air resistance. The mesh size should offer 60 or more strands per unit wavelength at the highest frequency to be shielded.

Table 3-1

Frequency Properties of Standard Sizes of Honeycomb

Ceil Size (in.)	Cutoff Frequency (GHz)	Upper Usable Frequency GHz)
1/8	48	16
3/16	32	10.7
1/4	24	8.0
3/8	16	5.3

e. Mount screens over apertures in the manner shown in Figure 3-24.

f. Compare the attenuation of various types of screen with the shielding effectiveness required before choosing the screen to be used.

g. Shield meters with one of the techniques illustrated in Figure 3-25.

h. Provide metal caps for fuse receptacles and for phone and meter jacks.

i. Use fuses, jacks, and receptacles that have metallic bodies where possible.

j. Shield either the front or rear of pilot and indicator lamps. Shielding of the front may be achieved through the use of wire screen or conductive glass.

k. Use equipment enclosures and cabinets to attenuate unwanted signals.

l. Employ internal modular shielding in specific applications where the enclosure shield is inadequate.

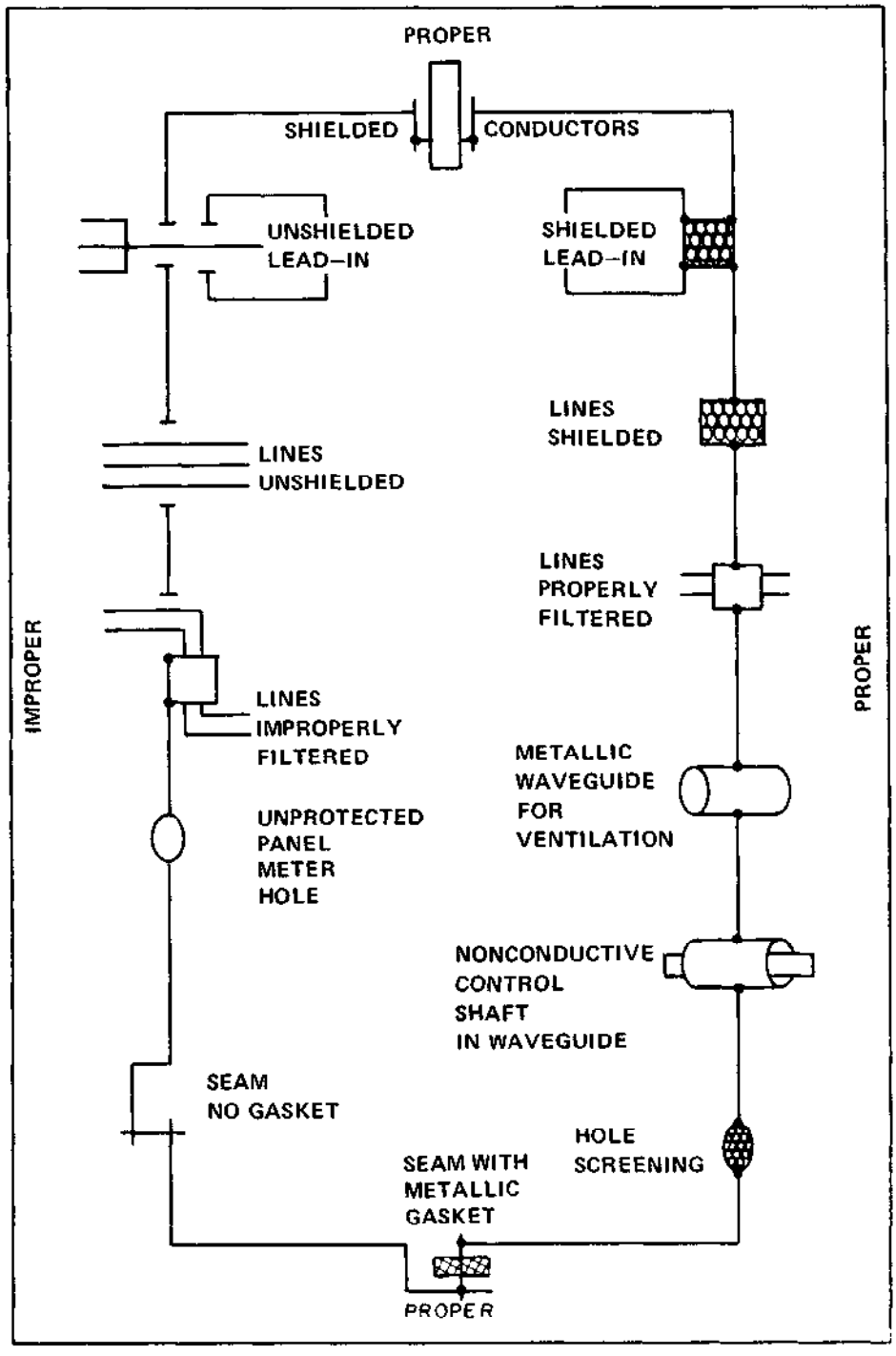

Figure 3-22. Illustration of Proper and Improper Shield Penetrations

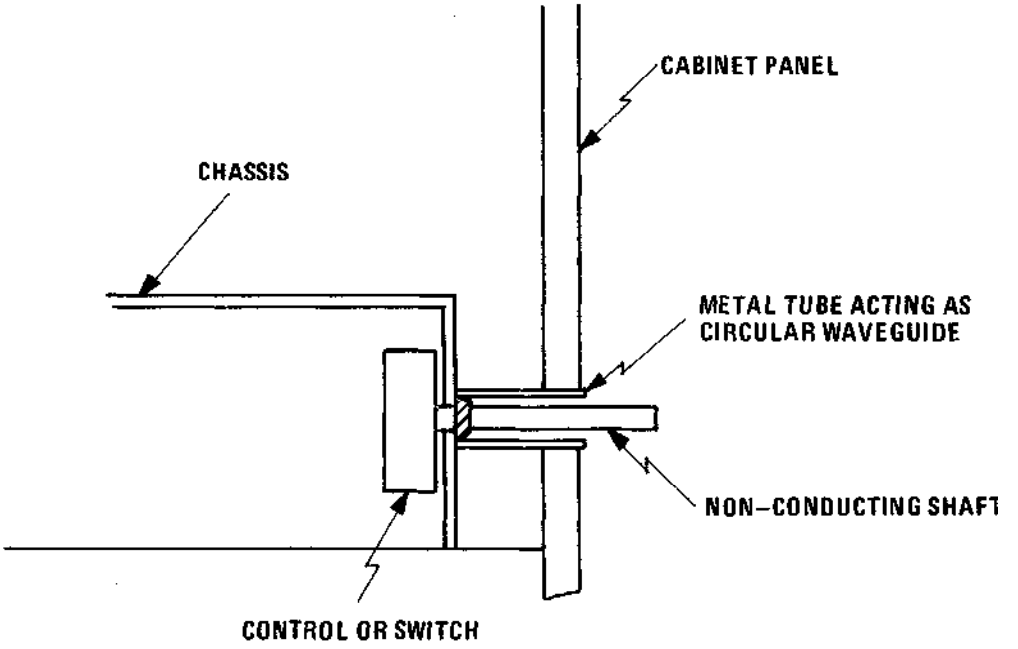

Figure 3-23. Use of Cylindrical Waveguide-Below-Cutoff for Control Shaft Shield Penetration

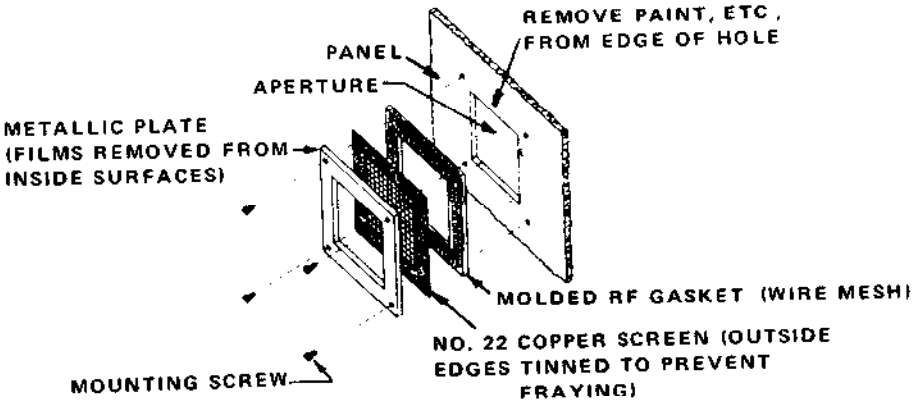

Figure 3-24. Method of Mounting Wire Screen Over a Large Aperture

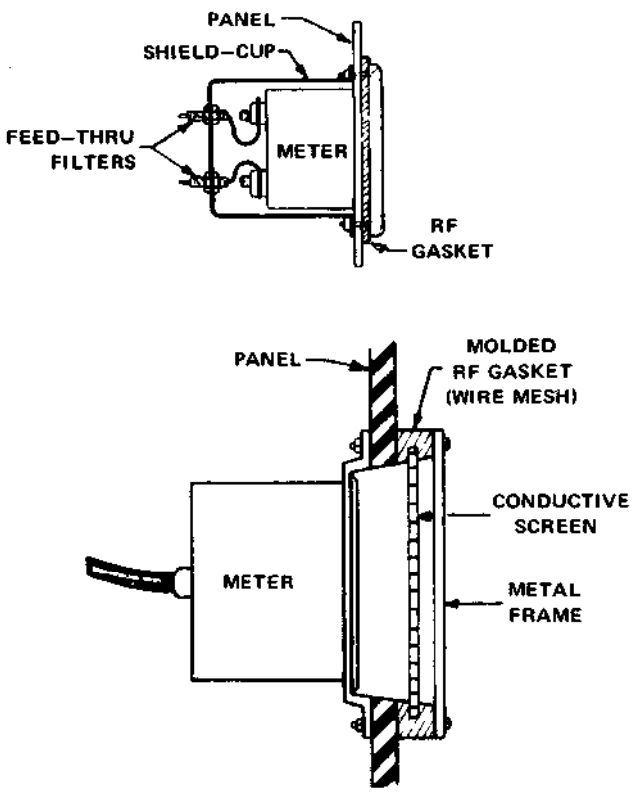

Figure 3-25. Acceptable Methods of Shielding Panel-Mounted Meters

m. Use internal walls and compartments to limit propagation of interference into and out of equipment subassemblies.

n. Separate high level sources from sensitive receptors with internal shields such as panels or partitions.

3.5 COMMON-MODE NOISE CONTROL AND INSTRUMENTATION GROUNDING.

3.5.1 Common-Mode Noise Control.

Primarily, common-mode noise is reduced by either (1) controlling its magnitude in the vicinity of the susceptible circuit, network, or device, or (2) employing those practices which minimize the coupling to the existing voltages, currents, or fields. The first alternative is accomplished by physically separating the source from the susceptible circuits, shielding the source, reducing the current or voltage level at the source, and minimizing any impedance shared in common by the desired and undesired currents. The second alternative involves grounding only one side of a noise voltage source, balancing of signal lines, operating in a differential mode, striving for a zero-resistance reference plane, shielding of signal lines, using a less susceptible mode of signal transmission, minimizing signal loop pickup area, or combinations thereof. (See Volume I, Section 6.4 for additional information on these minimization techniques.)

In some situations, one of these techniques may be sufficient (if properly implemented) to reduce the noise level to an acceptable level. In general, however, combinations of elements of both alternatives will be necessary. To decide which combinations offer the greatest advantages for least cost, the equipment or system must be carefully analyzed to determine its specific operational properties (or its requirements); the anticipated electromagnetic environment should be carefully examined in order to ascertain the specific type of protection that will probably be required; then these two sets of factors must be compared with each other to determine the steps to be taken to achieve effective and reliable equipment or system operation.

Common-mode noise control is primarily the application of proper grounding, bonding, and shielding practices in combination with careful circuit and equipment functional design to maximize the signal to noise ratio within the overall system. In particular, the lower frequency practices of Section 3.2.1.1 should be emphasized.

3.5.2 Instrumentation Grounding. (3-5)

Many, if not most, data instrumentation systems are concerned with the measurement or detection of physical phenomena (or changes in them) that require periods of observation or measurement that range from a few milliseconds to several minutes or longer. Because of the relatively slow nature of the event, the fundamental frequency of the transducer output may range from zero (dc) to a ‘few hundred hertz. Power distribution systems, electromechanical switches, and atmospheric noise produce extraneous voltages whose energy content is strongly concentrated within this lower frequency region. Because of this overlap of signals, special techniques are generally required to keep the voltages or currents produced by the extraneous sources from obscuring the transducer outputs.

Data instrumentation systems may employ either analog or digital signals or a combination of both. The methods of grounding analog and digital systems are considered separately although the physical principles of noise reduction for both are basically the same.

3.5.2.1 Analog Systems. Since the analog signals are primarily lower frequency in nature, a basic single-point ground should be implemented. The signal return line should be grounded at one end only or not at all (i.e., it should be balanced). Similarly, shields around signal lines should be grounded at one end only.

3.5.2.1.1 Grounded Transducers. The bonded (grounded) thermocouple, illustrated in Figure 3-26, is used with a single-ended data amplifier whose output drives recording devices, such as oscillographs, strip-chart recorders, and magnetic tape recorders.

a. The shield which surrounds the transducer signal leads should be grounded at the same point as the transducer to ensure that the shield and signal leads are at virtually the same potential.

b. When single-ended amplifiers must be used, the recorder should be left grounded.

c. When the bonded thermocouple is connected to an isolated differential amplifier as shown in Figure 3-27, the shield of the input cable should be connected to the amplifier internal guard shield to continue the signal shield within the amplifier. Notice that a grounding bus is shown connected between the data system signal reference and earth ground of the test area. This ground bus is necessary in any instrumentation system which uses isolated differential amplifiers in order to (1) provide the earth reference for the signal circuitry within the recording system to reduce high voltage hazards, and (2) minimize the common-mode potentials that otherwise exist between the amplifier's input and output if the data recording system was grounded to a separate earth or facility ground. Notice, also, that the amplifier case and output shield are connected to the data system (or load end) ground.

d. Grounded bridge transducers should be excited with a balanced dc source. By balancing the dc excitation supply relative to ground as shown in Figure 3-28 the entire bridge will be balanced with respect to ground and the unbalanced impedance presented to the amplifier input will be due only to the leg resistances in the bridge. Although a ground loop still exists, its effect is greatly reduced by a balanced excitation supply.

e. Wherever possible, use an isolated amplifier in the manner illustrated in Figure 3-29 with bridge transducers. With this configuration, both the transducer and the amplifier can be grounded without degrading system performance.

f. Ensure a low resistance earth ground connection (see Section 1.2).

g. Provide a single common signal ground reference point for all grounded transducers at the test area.

h. Connect the instrumentation cable shield of each data channel as close to the transducer ground connection as possible.

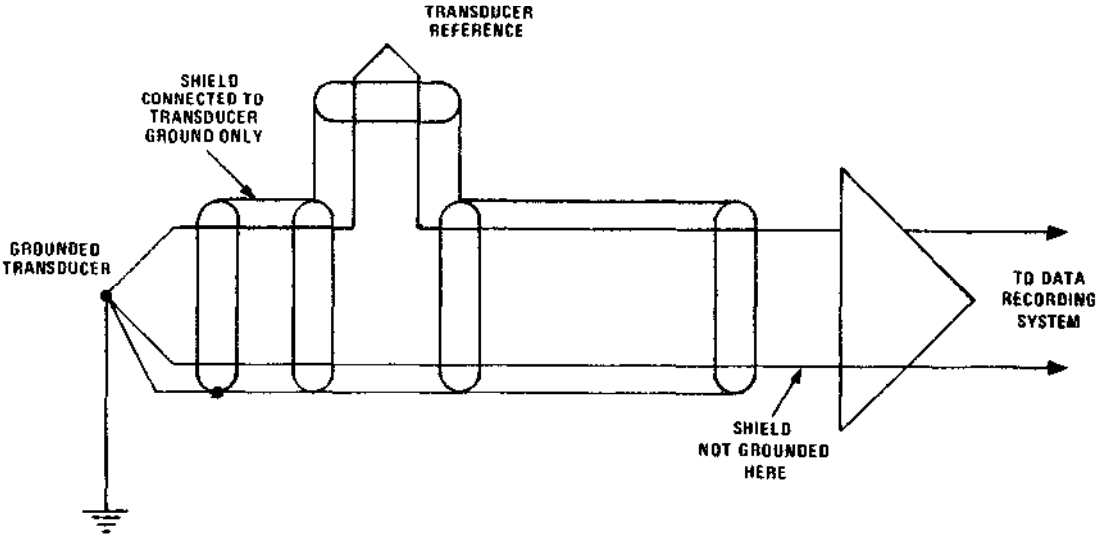

Figure 3-26. Grounding Practices for Single-Ended Amplifiers

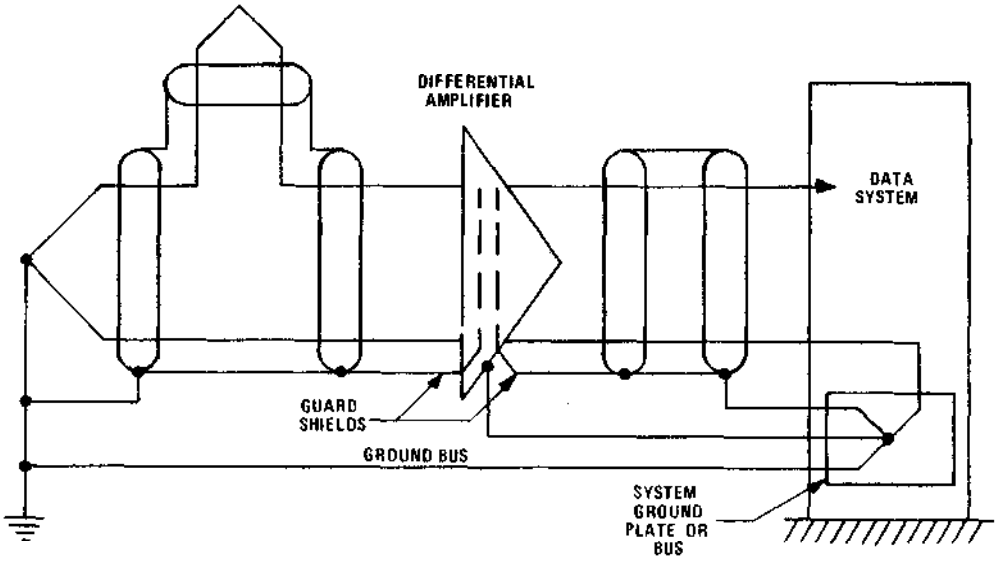

Figure 3-27. Grounding Practices for Differential Amplifiers

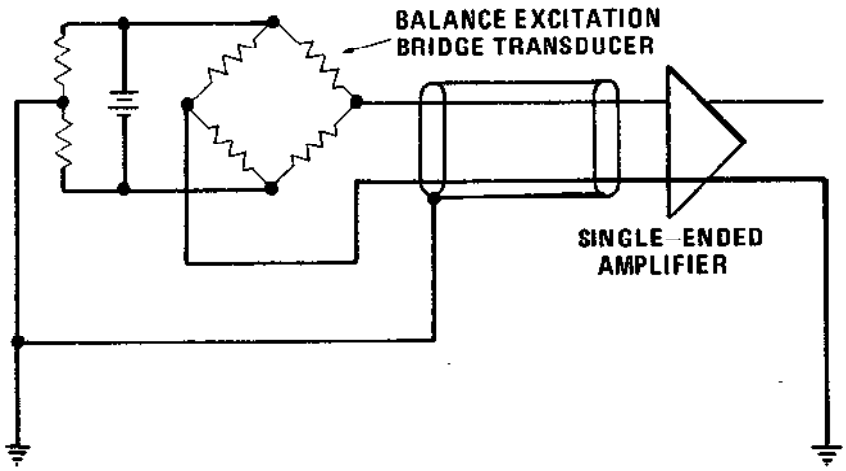

Figure 3-28. Method of Grounding Bridge Transducers

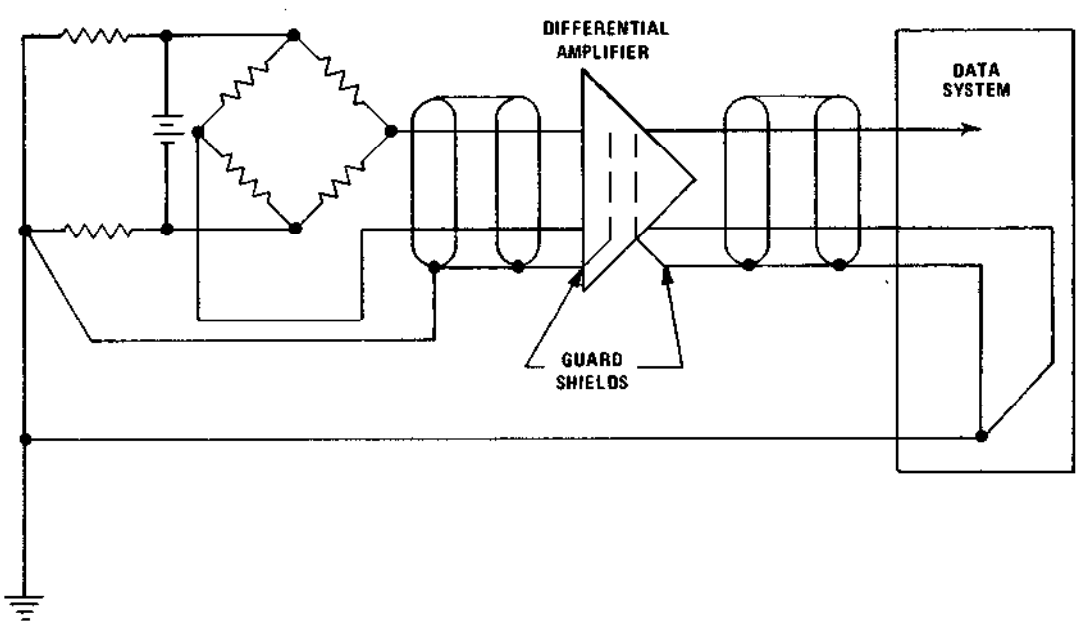

Figure 3-29. Use of Isolated Differential Amplifier With Balanced Bridge Transducer

i. Use twisted shielded transducer extension wires.

j. Use a floating load on the output of a single-ended data amplifier when the amplifier input is a grounded transducer.

k. Connect guard shield of data amplifier to input cable shield.

l. Always use insulated shielded cables. Uninsulated shields should never be used in data instrumentation systems.

3.5.2.1.2 Ungrounded Transducers.

a. Figure 3-30 illustrates the grounding techniques recommended for ungrounded transducers. The metallic enclosure of the transducer is connected to the cable shield and both the enclosure and the shield are grounded at the transducer. If the load on the cable signal line is a single-ended amplifier as shown in Figure 3-30(a), the shield of the input cable should not be connected to the amplifier. The case of the amplifier should be grounded at the load.

b. Figure 3-30(b) shows the recommended way of grounding the system when using an isolated amplifier. (Certain types of non-isolated differential amplifiers require that a transducer ground path be provided for proper amplifier operation. The instructions supplied by the amplifier manufacturer should be consulted for correct procedures.)

c. Provide a single common ground reference point for all cable shields.

d. Ground all input cable shields at the transducer.

e. Provide a continuous overall shield for signal wires from the transducer case to the input of the data amplifier.

f. Connect isolated amplifier guard shield to input cable shield.

g. Do not allow more than one ground connection in each input cable shield.

3.5.2.1.3 Amplifiers.

a. Single-ended amplifiers can be used in digital data acquisition systems if channel-to-channel isolation is provided (e.g., through the use of floating loads).

b. Single-ended amplifiers should not be used with grounded (bonded) transducers in order to avoid channel-to- channel ground loops.

c. Single-ended amplifiers should not be used with grounded bridges to avoid short circuiting one leg of the bridge.

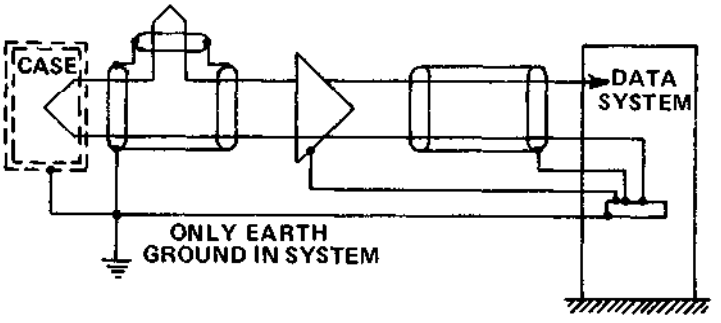

(a) SINGLE-ENDED AMPLIFIER

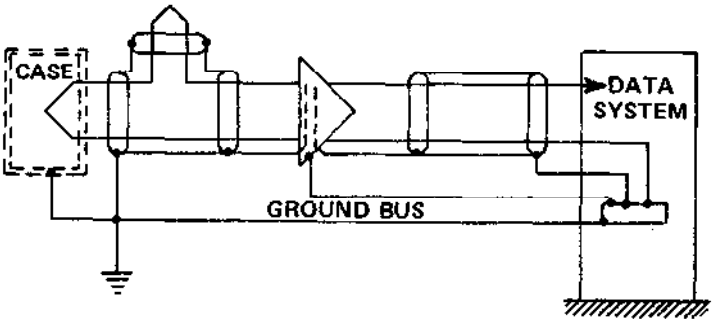

(b) ISOLATED DIFFERENTIAL AMPLIFIER

Figure 3-30. Recommended Grounding Practices for Floating Transducers

d. Connect amplifier output guard shield to data system ground bus.

e. If a permanent unavoidable instrumentation ground exists at test area as well as at the data system, use isolated differential amplifiers to break the ground loop.

3.5.2.2 Digital Data Systems. A digital circuit operates by recognizing the state of a two-level voltage or current signal. The speed of the system is determined by the speed at which the levels can be changed. Because of the capacitive and magnetic coupling effects resulting from the very fast rise and fall times of digital pulses, take every precaution to minimize the effects.

a. Twist clock lines with their return leads to minimize the magnetic field near such lines.

b. Use point-to-point wiring as much as possible to reduce capacitive coupling.

c. Provide multiple paths in the ground wiring to distribute the ground current among several wires.

d. Use electrostatic shielding with care to avoid excessive loading of data lines.

e. Wire all digital circuits using shortest wire length possible.

f. All ground wires must converge to system common ground point.

g. Maintain maximum distance between digital circuits and low level analog circuits.

h. In a system where both analog and digital circuits must be housed in the same equipment cabinet, keep as much physical separation between them as possible, e.g., at opposite ends of the cabinet. A common ground plate for the system can be located in the center of the cabinet or two ground plates can be utilized, one for analog ground and one for digital ground. These two ground plates must then be tied together with a low inductance bus and then tied to the system ground bus line.

3.5.2.3 Recording Devices.

3.5.2.3.1 Magnetic Tape Recorders.

a. Magnetic tape recording systems are mostly single-ended and should therefore conform to much the same grounding practices as recommended for digital systems.

b. Earth ground should be made at the test area with a single 1/0 cable extending to an isolated grounding plate within the tape cabinet.

c. When using only one recording device for a given channel, the channel may be connected directly into the recorder as shown in Figure 3-31.

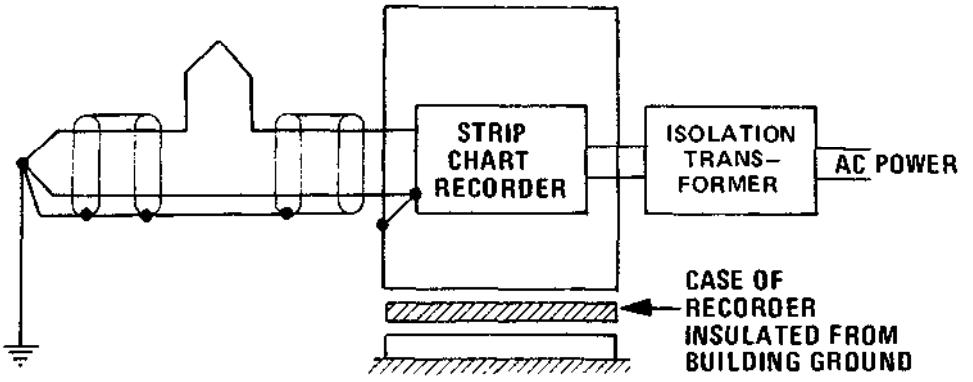

Figure 3-31. Grounding for Single Channel Strip Chart Recorder

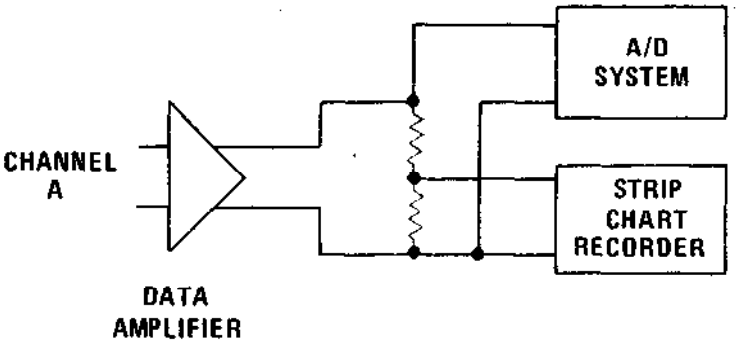

Figure 3-32. Resistive Isolation of Data Channels

d. Should the tape channels receive data in parallel with other single-ended channels (such as arise in A/D systems), take special care to minimize the effects of inherent loops. The optimum method of recording with two single-ended devices in parallel from the same data channel is to use an amplifier with isolated outputs. (In this way, the inherent loop is broken and noise is minimized.)

3.5.2.3.2 Strip Chart Recorders.

a. Strip chart recorders are mostly single-ended and should be grounded as described in Section 3.5.2.3.1 for magnetic tape devices.

b. Since the strip chart recorder is a nulling device, its input impedance will change as it deflects from one position to another. This impedance change and the accompanying voltage feedback can be coupled directly from the strip chart input over to the input of a paralleled device such as an A/D converter. Gross error can result in the A/D channel. This difficulty can be resolved by using resistive isolation as shown in Figure 3-32 or by employing dual amplifier outputs, one for each channel, as described in Section 3.5.2.3.1 for analog tape systems.

3.5.2.3.3 X-Y Plotters. X-Y plotters are available in either digital or analog input configurations. The digital type plotters are usually connected as peripheral devices to computers or A/D systems and should be grounded in accordance with the recommended digital practices. Analog type X-Y plotters are normally single-ended and should be grounded and connected in the same manner as described for strip chart recorders.

3.6 EMP CONSIDERATIONS. Those general design practices which are effective for the control of electromagnetic interference generally are applicable to protection against EMP. The two factors of the EMP threat to be given particular emphasis are (1) the strong magnetic field component and (2) the overall high level of the incident field (see Volume I, Chapter 10).

a. Because of the magnetic field component, design practices which minimize magnetic pickup are most important. Practices such as minimizing loop pickup area by twisting signal conductors with their returns, twisting of power supply conductors, routing conductors close to ground planes, and utilizing minimum length conductors must be emphasized.

b. EMP shielding requires the use of materials which provide high attenuations at frequencies up to 200 MHz. Because of saturation effects, the thickness necessary for complete shielding can lead to rather heavy and bulky enclosures. Seams, joints, and apertures must be given the same careful attention and control required in the construction of shields for buildings and structures. For these reasons, it is generally more practical to shield the building or structure in which the equipment is located than it is to shield individual pieces of equipment.

c. In a shielded area or facility, critical equipment should be located as far from corners, discontinuities, openings and penetrations as is practical. The most susceptible equipment should occupy the center locations with the least susceptible equipment closer to the shield.

d. Components exhibit different degrees of susceptibility to damage from EMP (see Volume I, Chapter 10). Electromechanical devices appear to be the least susceptible. Vacuum tube devices offer reasonable immunity, while solid state devices such as diodes, transistors (FET's -Field Effect Transistors- in particular), silicon controlled rectifiers, and integrated circuits exhibit damage susceptibility thresholds two to three orders of magnitude less than the threat posed by the EMP. These factors should be kept in mind during initial design and, wherever a circuit function can be accomplished with a less susceptible device, use the device with greater immunity. For example, an electromechanical relay will be less likely to suffer damage than will an SCR (Silicon Controlled Rectifier) or transistor switch. A vacuum tube front end for a receiver will offer greater immunity than will the transistor version. Where the more susceptible devices must be used, they should be adequately shielded (the compartmentalization of subassemblies is probably the most economical and practical approach) with appropriate surge protection applied to all incoming and outgoing leads.

e. Effective EMP design practices require careful tradeoff comparisons between functional requirements, device properties, physical constraints, and overall cost. Consult Volume I, Chapter 10 for additional design assistance; References 3-6 and 3-7 are also highly recommended.

3.7 EQUIPMENT INSPECTION AND TEST PROCEDURES.

Before installing, or accepting for installation, any piece or item of electronic equipment in a facility designed or modified to meet the recommendations represented herein, the equipment should be evaluated for conformance with the practices set forth in this volume. Record the results of this evaluation on the Inspection Form given in Section 3.7.11.

Before beginning the evaluation, determine whether the equipment is designed to operate at frequencies (a) from dc to 30 kHz (in some cases up to 300 kHz), or (b) above 300 kHz (in some cases down to 30 kHz). Square wave signals are always considered to be higher frequencies. In making this determination, the primary signals to consider are those which interface or communicate with other equipments or systems. For example, the frequencies of control and monitor signals, communication signals, data links, and input and output rf signals should be noted. (Those signals arising from internal sources and utilized only internally to a unit or piece of equipment are primarily the designer's responsibility.) List the frequencies under Part IA of the Inspection Form.

After establishing the frequency classification of the equipment, inspect the lower frequency types for conformance with the recommendations set forth in Section 3.2.1.1 and inspect the higher frequency types for conformance with the recommendations contained in Section 3.2.1.2. Some equipments will necessarily utilize both lower and higher frequency signals for interfacing purposes. For example, wideband data links frequently extend from low audio frequencies to frequencies well above 10 MHz. Such hybrid systems should be inspected for conformance to the recommendations set forth in Section 3.2.1.3. Specific inspection steps and procedures for all three types of equipments are contained in the following sections.

3.7.1 Lower Frequency Equipments.

a. Examine the drawings and schematics and visually inspect to see if an isolated single-point signal ground as described in Section 3.2.1.1.1 is provided. Provide a brief description of the signal ground network under Part IB of Inspection Form or attach copies of the schematics or drawings. Verify that the internal signal ground network is terminated to an insulated signal ground terminal of a type described in Section

3.2.1.1.2 or as otherwise specified. If a wire is used, verify that the size conforms to the 500 cmil per foot criteria (or as specified). Enter the information requested on Part IC of the Inspection Form.

b. Verify that the signal ground is correctly identified with a yellow label or color code.

c. With all cables (signal cables, control lines, power cables, etc.) disconnected, measure the resistance between the signal ground terminal and the equipment case with an ohmmeter (see Figures 3-33 and 3-34). The resistance should be greater than one megohm. Also, measure the resistance between each ac input terminal (ground wire excluded) and the case. A resistance of one megohm or greater should be measured.

d. Record both readings on the Inspection Form. If the measured resistance is less than one megohm, proceed as follows:

(1) First check to see that all cables, lines, cords, etc., are disconnected from the equipment or that the far ends of any such cables are insulated from other equipments and the structure. Disconnect all cables found still connected.

(2) If no connected cables are found or the low resistance reading still exists after disconnecting all cables, visually inspect the mounting of the signal ground terminal to see that it is properly insulated from the case or cabinet (disassemble, if necessary). Alternately, disconnect the signal ground connection inside the equipment and then measure the resistance between just the terminal and the case. If the terminal is not insulated from the case or cabinet, it must be redone.

(3) If the preceding two steps fail to identify the reason for the lack of isolation, the equipment schematics and mechanical layout should be analyzed and inspected to locate the compromise in the signal ground isolation. Be particularly alert for sneak paths through components (transformers, switches, relays, etc.), readout devices (meters, lights), physical contact between the case or cabinet and the signal ground, and wiring errors.

e. Measure the resistance between the green safety wire and the case; the resistance reading should be 0.1 ohm or less. If a higher resistance reading is obtained, inspect the equipment to see if the green wire in the power cord has been connected to the case or cabinet. If the connection is there physically, was the paint removed from the area of attachment? Are screws or nuts fastened securely? If any of these deficiencies exist, they must be corrected before installing or energizing the equipment.

f. Inspect all cabling and connectors to see that balanced signal lines are used for lower frequency interfacing lines and that cable shields are grounded only at one end. The shields of individual cable pairs must be isolated from each other except at the common ground points. Check overall shields for grounding in accordance with Section 3.2.1.1.6. Record any specifically noted deficiencies under Part IE of the Inspection Form.

g. If the equipment is already installed, verify that the signal ground terminal is connected to the nearest feeder ground plate of the lower frequency signal ground network for the facility. Check the size of the cable to see that it conforms to the 500 cmil per foot criteria of Section 3.2.1.1.3 or as otherwise specified.

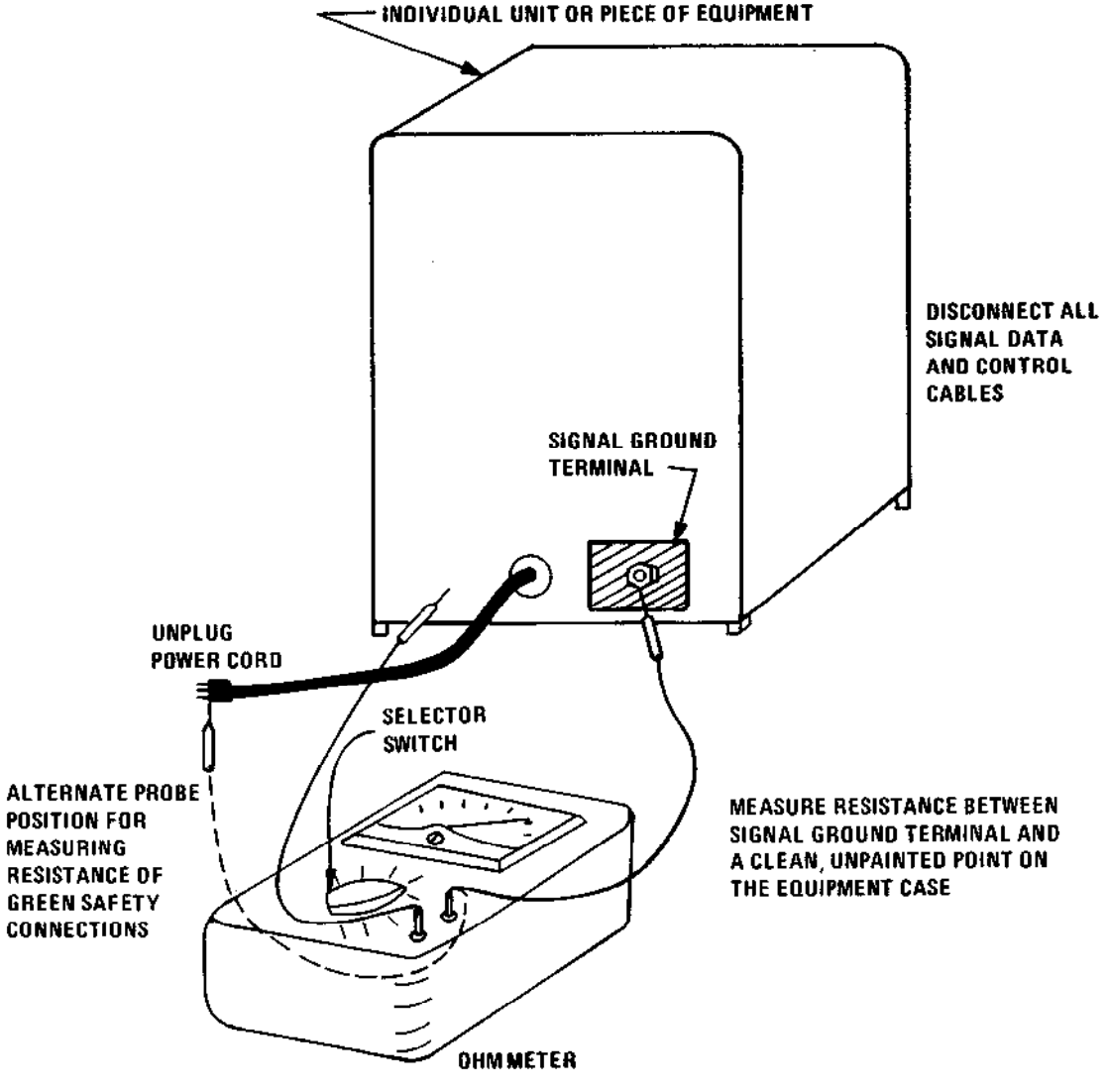

Figure 3-33. Signal Ground Terminal Isolation Resistance Test for an Individual Equipment

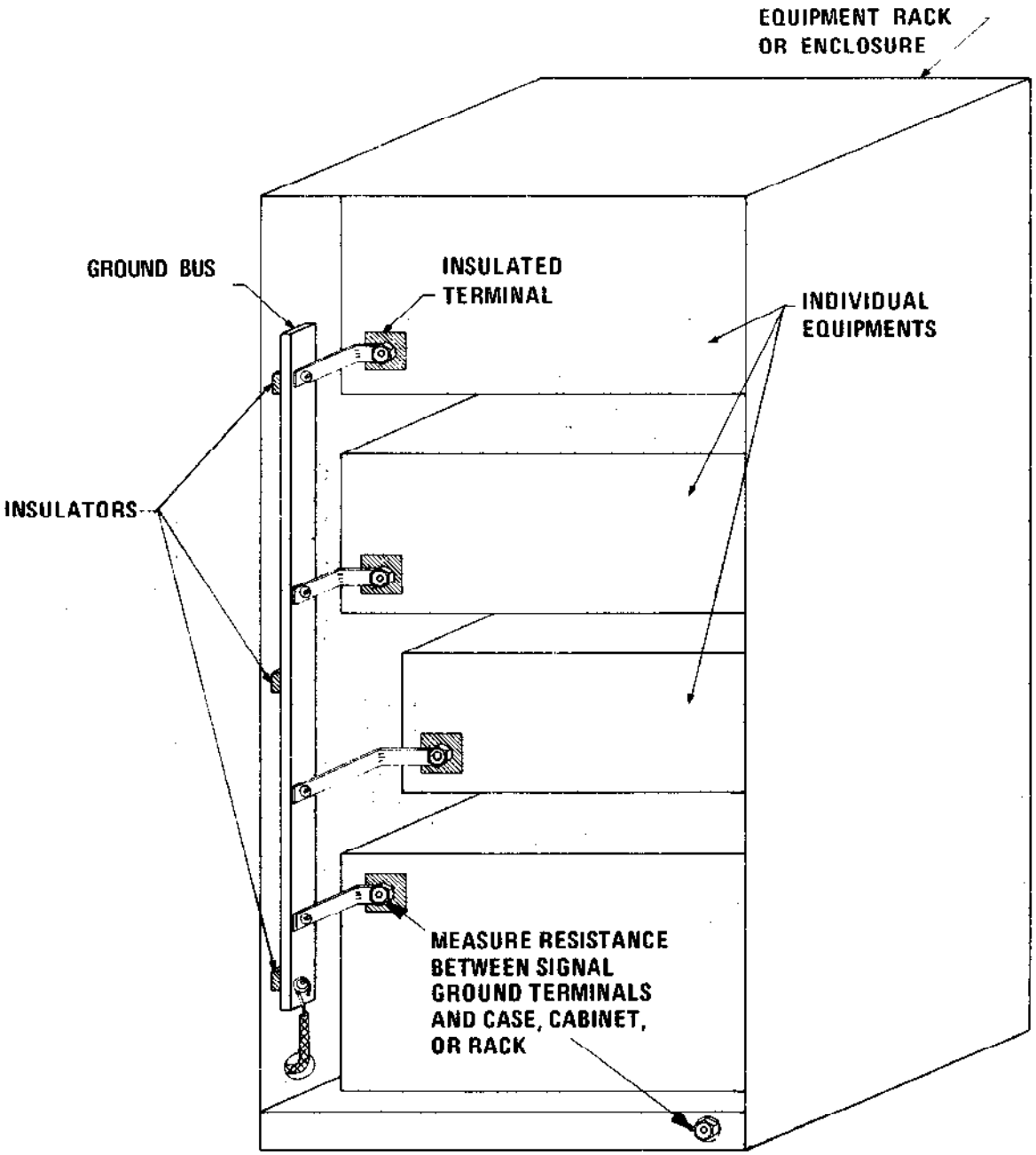

NOTE: PRIOR TO PERFORMING RESISTANCE TESTING, DISCONNECT OR UNPLUG ALL CABLES (SIGNAL, POWER, DATA, CONTROL, ETC.)

Figure 3-34. Signal Ground Terminal Isolation Resistance Test for an Equipment Assembly

3.7.2 Higher Frequency Equipments.

a. Verify that higher frequency reference points and planes are directly grounded to the chassis and the equipment case to the extent permitted by circuit design requirements (and unless specified otherwise). If necessary, review Section 3.2.1.2 before inspecting the higher frequency grounds in the equipment.

b. Check to see that properly matched constant impedance cables are used for interfacing purposes. Verify that all connectors are of a type and design that provides a low impedance path from the signal line shield to the equipment case. Do not permit the use of pigtails for the termination of higher frequency line shields outside the equipment case.

c. Check connectors for tightness, cleanliness, and for proper mounting (see Sections 3.2.1.2.2 and 3.3). Measure the resistance between the connector shell or body and its mounting surface with a double balanced dc bridge as illustrated in Figure 3-35 (see Section 2.2.2.3.1 for the measurement procedure). The resistance should not exceed one milliohm. If the resistance exceeds one milliohm, the mounting surfaces should be recleaned to remove all paint, nonconductive coatings, or dirt and all screws or fasteners should be retightened to achieve a close mechanical fit.

d. Measure the point-to-point resistance between selected points on the case or cabinet with the double balanced bridge. The maximum resistance between any two points on the case or cabinet should be one milliohm or as specified. If the resistance is greater than one milliohm, check to see that all bonding surfaces are properly cleaned and that all connections are securely fastened. (Larger sized grounding cables may have to be added to reduce the resistance to one milliohm or less.)

e. Record the results of the inspection under Part I of the Inspection Form.

3.7.3 Hybrid Equipments. Before inspecting equipments utilizing both lower and higher frequency interfacing signals, review Section 3.2.1.3. If the lower and higher frequency signal networks are separate, inspect each in accordance with the preceding respective instructions. If the networks involve both lower and higher frequency signals, inspect for conformance with the higher frequency requirements. Record the results of the inspection under Part I of the Inspection Form.

3.7.4 Installed Equipments. Check to see that installed equipments, in addition, have their cases or cabinets grounded to the facility ground system of the facility with a cable providing at least 2000 cmil per running foot (or as specified) as described in Section 3.2.3. Also obtain and record the other information requested in Part II of the form.

3.7.5 Fault Protection Subsystem. Verify that all exposed metal parts of the equipment are properly grounded with the green safety wire as prescribed by MIL-STD-138-124A. The size of this wire must conform to Table l-28 or Table 250-95 of the NEC. Convenience outlets should be grounded in the manner described in Section 3.2.2. Record all information obtained under Part III of the form.

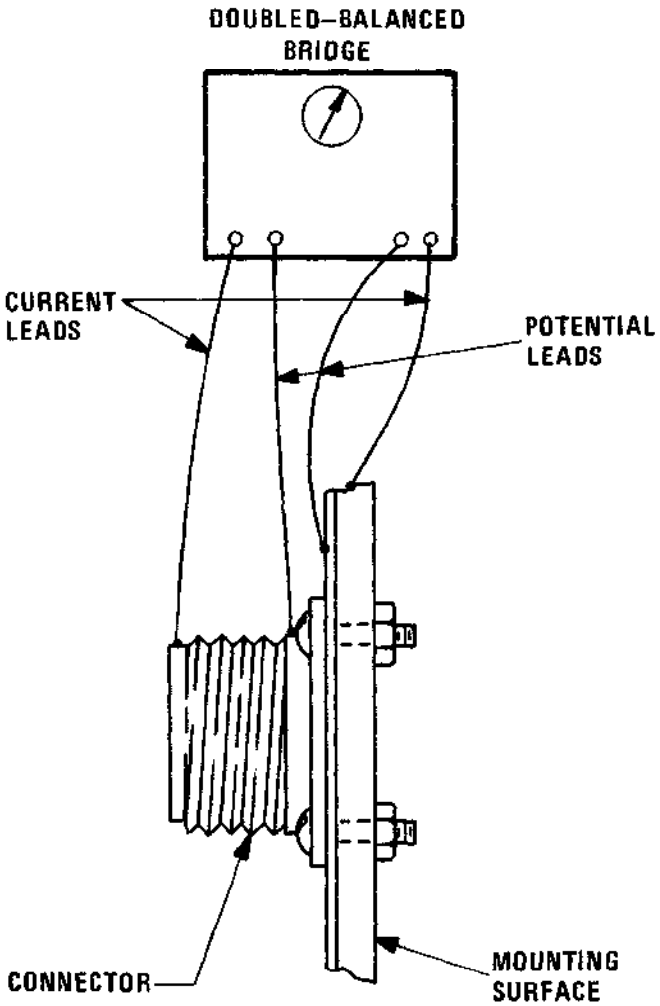

Figure 3-35. Measurement of Connector Bonding Resistance

3.7.6 Bonding.

a. Inspect all joints, seams, and connections to see that the mating surfaces were cleaned of corrosion, nonconductive finishes, and dirt prior to joining (see Section 1.7.2). Check fasteners for tightness combinations of dissimilar metals been avoided (see Section 1.7.3) or, where unavoidable, have appropriate protective measures been applied (see Section 1.7.3 or Volume I, Section 7.7)?

b. Do not permit sheet metal screws or Tinnerman nuts to be used for electrical bonding.

c. Where used, do bonding jumpers generally conform to the recommendations contained in Section 3.3.h.

d. Check all bonds between subassemblies, equipments, and racks for conformance with Sections 3.3.h-n.

e. Inspect shield terminations for tight peripheral bonding to the connector shell. Such connections should be firm, offer maximized contact between the shield and the shell, and should be formed in a way that restricts the entrance of moisture and foreign matter into the bond area. Preferably bonds should be protected with an adequate weather seal.

f. Pigtail terminations should be inspected for tightness and for excessive length (see Section 3.2.1.1.7). The pigtail should only be long enough to permit the connection to be made.

g. Complete Part IV of the Inspection Form.

3.7.7 Shielding.

a. Examine the construction and layout of the equipment carefully to see if the design guidelines contained in Section 3.4 have been conscientiously considered. Be particularly alert for obvious shielding deficiencies such as poorly bonded seams; very high level (or very low level) circuits or devices with no shielding applied; use of unshielded wire extending into or out of shielded area; unprotected meters, jacks and other openings; unnecessarily large or unshielded ventilation ports; and the absence of gaskets or those which have been poorly installed.

b. Inspect gaskets for correct cleaning and preparation of the mounting and contacting surfaces. Check the gasket for firm and continuous contact with the mating surface upon closure. Does the gasket appear to offer sufficient resilience to withstand the repeated compression and release expected to be associated with the point where applied? Is the gasket and mating surface adequately protected against corrosion?

c. Complete Part V of the Inspection Form.

3.7.8 Instrumentation System.

a. Generally inspect analog systems for conformance with the recommendations presented in Section 3.5.2.1.

b. Inspect the grounding networks of digital data systems for conformance with the recommendations of Section 3.5.2.2.

3.7.9. EMP Design.

a. Has the potential threat of an EMP event been considered in the design of the equipment? (Note that most of the measures for EMP protection are also effective against lightning.) Have measures been taken to reduce magnetic pickup (see Volume I, Chapter 10)?

b. Has extra emphasis been devoted to providing effective magnetic shields over potentially susceptible devices and components?

c. Are components and devices having high degrees of immunity to EMP (and lightning) surges used where possible?

d. Are all incoming and outgoing conductors adequately protected with fast acting transient protective devices?

3.7.10 Other Observations. As appropriate, note the existence of any personnel hazards due to deficiencies of grounding, bonding, or shielding under Part VI of the Inspection Form. If appropriate to the intended use of the equipment, determine what type of lightning surge protection, if any, is provided on signal, control, or power lines associated with the equipment. Record all observations under Part VI of the Form.

3.7.11 Inspection Form.

EQUIPMENT

GROUNDING, BONDING, AND SHIELDING

Equipment Type _____

Manufacturer _____

Inspector _____ Date _____

PART I - SIGNAL GROUNDING

A. Operating Frequencies:

Function	Frequency

B. Schematic Diagram or Word Description of Signal Ground:

C. Signal Ground Terminal:

Type _____

Size _____

Location _____

D. Isolation Resistance Reading:

Signal Ground Terminal _____

AC Input Terminals _____

E. Cables and Connectors (Identify any noted deficiencies):

Location	Deficiency

PART II - INSTALLED EQUIPMENTS

A. Lower Frequency Signal Ground Lead Size _____

B. Case or Cabinet Grounding Lead Size _____

C. Resistance Between Case and Facility Ground System or Structure
(five rnilliohms maximum) _____

PART III - SAFETY GROUND

A. Green Safety Wire Conforming to Article 250 of NEC Present? _____

B. Resistance Between Power Plug Ground Terminal and Case or Cabinet
_____ (0.1 ohm maximum)

C. Other Deficiencies:

Location	Defect

PART IV - BONDS

A. Defects:

Location	Nature of Defect

B. Resistance Measurements (Identify all bonds showing greater than one milliohm resistance):

Location	Resistance

PART V - SHIELDING

Results of Shielding Inspection:

Location	Deficiency

PART VI - OTHER OBSERVATIONS

A. Personnel Hazards:

B. Surge Protection:

3.8 REFERENCES.

3-l. D.M. Baker, “Magnetic and Electrostatic Wire Coupling in the Audio Frequency Range,” Report No. D-18306, Boeing Airplane Co, Seattle WA, May 1956.

3-2. R.E. Taylor, “Radio Frequency Interference Handbook," NASA-SP-3067, National Aeronautics and Space Administration, Washington DC, 1971, N72-11153-156.

3-3. “RFI Control Plan for Project Gemini Spacecraft,” Genistron, Incorporated, Los Angeles CA, 24 August 1962.

3-4. C.B. Pearlston, Jr, “Electromagnetic Compatibility Requirements for Space Systems,” TOR-1001 (2307)-39, Contract FO4695-67-C-0158, Aerospace Corporation, El Segundo CA, December 1967.

3-5. “Instrumentation Grounding and Noise Minimization Handbook," AFRPL-TR-65-1, Consolidated Systems Corporation, Pomona CA, January 1965, AD 612 027.

3-6. “DNA EMP (Electromagnetic Pulse) Handbook,” DNA 2114H-1, Defense Nuclear Agency, Washington DC, November 1971.

3-7. EMP Engineering Practices Handbook, NATO File No. 1460.2, October 1977.

3-8. NCS TIB 78-1, EMP Lightning and Power Transients: Their Threat and Relevance to EMP Protection Standards for Telecommunication Facilities, August 1978.

CHAPTER 4

NOTES

4.1 SUBJECT TERM (KEY WORD) LISTING. Key words contained in Volume I and Volume II of this handbook include:

Grounding
Bonding
Shielding
Facility Ground System
Lightning Protection Subsystem
Fault Protection Subsystem
Signal Reference Subsystem
Earth Electrode Subsystem
Single-Point Grounding
Multipoint Grounding
Equipotential Ground Plane
Air Terminal (Lightning Rod)
Electromagnetic Pulse (EMP)
Lower Frequency Ground
Higher Frequency Ground
Phase Conductor
Grounding Conductor (Green Wire)
Grounded Conductor
Neutral Conductor
Ring Ground
Fall-of-Potential Ground Test
Shielding Effectiveness
Zone (Cone) of Protection
Power System Grounding
Signal Grounding
Facility Shielding
Equipment Shielding
Corrosion
Down Conductor, Lightning
Cathodic Protection

APPENDIX A

GLOSSARY

ABSORPTION LOSS -- The attenuation of an electromagnetic wave as it passes through a shield. This loss is primarily due to induced currents and the associated I^2R loss.

AIR TERMINAL -- The lightning rod or conductor placed on or above a building, structure, tower, or external conductors for the purpose of intercepting lightning.

APERTURE -- An opening in a shield through which electromagnetic energy passes.

BALANCED LINE -- A line or circuit using two conductors instead of one conductor and ground (common conductor). The two sides of the line are symmetrical with respect to ground. Line potentials to ground and line currents are equal but of opposite phase at corresponding points along the line.

BOND -- The electrical connection between two metallic surfaces established to provide a low resistance path between them.

BOND, DIRECT -- An electrical connection utilizing continuous metal-to-metal contact between the members being joined.

BOND, INDIRECT -- An electrical connection employing an intermediate electrical conductor or jumper between the bonded members.

BOND, PERMANENT -- A bond not expected to require disassembly for operational or maintenance purposes.

BOND, SEMIPERMANENT -- Bonds expected to require periodic disassembly for maintenance, or system modification, and that can be reassembled to continue to provide a low resistance interconnection.

BONDING -- The process of establishing the required degree of electrical continuity between the conductive surfaces of members to be joined.

BUILDING -- The fixed or transportable structure which houses personnel and equipment and provides the degree of environmental protection required for reliable performance of the equipment housed within.

CABINET -- A protection housing or covering for two or more units or pieces of equipments. A cabinet may consist of an enclosed rack with hinged doors.

CASE -- A protective housing for a unit or piece of electrical or electronic equipment.

CHASSIS -- The metal structure that supports the electrical components which make up the unit or system.

CIRCULAR MIL -- A unit of area equal to the area of a circle whose diameter is one mil (1 mil = 0.001 inch). A circular mil is equal to $\pi/4$ or 78.54 percent of a square mil (1 square mil = 10^{-6} square inch). The area of a circle in circular mils is equal to the square of its diameter in mils.

CIRCUIT -- An electronic closed-loop path between two or more points used for signal transfer.

COMMON-MODE VOLTAGE -- That amount of voltage common to both input terminals of a device.

COMMON-MODE REJECTION -- The ability of a device to reject a signal which is common to both its input terminals.

CONDUCTED INTERFERENCE -- Undesired signals that enter or leave an equipment along a conductive path.

COPPER CLAD STEEL -- Steel with a coating of copper bonded on it.

COUPLING -- Energy transfer between circuits, equipments, or systems.

COUPLING, CONDUCTED -- Energy transfer through a conductor.

COUPLING, FREE-SPACE -- Energy transfer via electromagnetic fields not in a conductor.

CUTOFF FREQUENCY -- The frequency below which electromagnetic energy will not propagate in a waveguide.

DEGRADATION -- A decrease in the quality of a desired signal (i.e., decrease in the signal-to-noise ratio or an increase in distortion), or an undesired change in the operational performance of equipment as the result of interference.

DOWN CONDUCTOR, LIGHTNING -- The conductor connecting the air terminal or overhead ground wire to the earth electrode subsystem.

EARTH ELECTRODE SUBSYSTEM -- A network of electrically interconnected rods, plates, mats, or grids installed for the purpose of establishing a low resistance contact with earth.

ELECTRIC FIELD -- A vector field about a charged body. Its strength at any point is the force which would be exerted on a unit positive charge at that point.

ELECTROMAGNETIC COMPATIBILITY (EMC) -- The capability of equipments or systems to be operated in their intended operational environment, within designed levels of efficiency, without causing or receiving degradation due to unintentional EMI. EMC is the result of an engineering planning process applied during the life cycle of equipment. The process involves careful considerations of frequency allocation, design, procurement, production, site selection, installation, operation, and maintenance.

ELECTROMAGNETIC INTERFERENCE (EMI) -- Any electrical or electromagnetic phenomenon, manmade or natural, either radiated or conducted, that results in unintentional and undesirable responses from, or performance degradation or malfunction of, electronic equipment.

ELECTROMAGNETIC PULSE (EMP) -- A large impulsive type electromagnetic wave generated by nuclear or chemical explosions.

EQUIPMENT, UNIT OR PIECE OF -- An item having a complete function apart from being a component of a system.

EQUIPMENT GROUNDING -- Attained by the grounding conductor of the fault protection subsystem, and/or bonding to the signal reference subsystem or the structural steel elements of the building.

EQUIPOTENTIAL PLANE -- A grid, sheet, mass, or masses of conducting material which, when bonded together, offers a negligible impedance to current flow. (serves as signal reference subsystem for new facilities)

FACILITY -- A building or other structure, either fixed or transportable in nature, with its utilities, ground networks, and electrical supporting structures. All wiring, cabling as well as electrical and electronic equipments are also part of the facility.

FACILITY GROUND SYSTEM -- The electrically interconnected system of conductors and conductive elements that provides multiple current paths to earth. The facility ground system includes the earth electrode subsystem, lightning protection subsystem, signal reference subsystem, fault protection subsystem, as well as the building structure, equipment racks, cabinets, conduit, junction boxes, raceways, duct work, pipes, and other normally noncurrent- carrying metal elements.

FAR FIELD -- The region of the field of an antenna where the radiation field predominates and where the angular field distribution is essentially independent of the distance from the antenna.

FAULT -- An unintentional short-circuit, or partial short-circuit, (usually of a power circuit) between energized conductors or between an energized conductor and ground.

FIRST SERVICE DISCONNECT -- The necessary equipment (circuit breakers, switches, fuses etc.) located at the point of entrance of power conductors to a building or other structure.

GROUND -- The electrical connection to earth primarily through an earth electrode subsystem. This connection is extended throughout the facility via the facility ground system consisting of the signal reference subsystem, the fault protection subsystem, the lightning protection subsystem and the earth electrode subsystem.

GROUNDED CONDUCTOR -- (Neutral) The circuit conductor that is intentionally grounded (at first service disconnect or power source).

GROUNDING CONDUCTOR -- (Green Wire) A conductor used to connect equipment or the grounded circuit of a power system to the earth electrode subsystem.

HIGHER FREQUENCY GROUND -- The interconnected metallic network intended to serve as a common reference for currents and voltages at frequencies above 30 kHz and in some cases above 300 kHz. Pulse and digital signals with rise and fall times of less than 1 microsecond are classified as higher frequency signals.

INTERFACE -- Any electrical connection (encompassing power transfer, signaling, or control functions) between two or more equipments or systems.

ISOKERAUNIC (or isoceraunic) -- Showing equal frequency of thunderstorms.

ISOLATION -- Physical and electrical arrangement of the parts of an equipment, system, or facility to prevent uncontrolled electrical contact within or between the parts.

LIGHTNING PROTECTION SUBSYSTEM -- A complete subsystem consisting of Air Terminals, interconnecting conductors, ground terminals, arresters and other connectors or fitting required to assure a lightning discharge will be safely conducted to earth.

LOWER FREQUENCY GROUND -- A dedicated, single-point network intended to serve as a reference for voltages and currents, whether signal, control or power, from de to 30 kHz and some cases to 300 kHz. Pulse and digital signals with rise and fall times greater than 1 microsecond are considered to be lower frequency signals.

MAGNETIC FIELD -- A vector field produced by a continuous flow of charge.

MULTIPOINT GROUND -- More than one path to ground.

NATIONAL ELECTRICAL CODE (NEC) -- A standard governing the use of electrical wire, cable, and fixtures installed in buildings. It is sponsored by the National Fire Protection Association (NFPA-701 under the auspices of the American National Standards Institute (ANSI-CI.

NEAR FIELD -- The region of the field immediately surrounding an antenna where the inductive and capacitive fields predominate. In this region the angular distribution of the field varies with distance from the antenna.

NEUTRAL -- The ac power system conductor which is intentionally grounded on the supply side of the first service disconnect(ing) means. It is the low potential (white) side of a single phase ac circuit or the low potential fourth wire of a three-phase wye distribution system. The neutral (grounded conductor) provides a current return path for ac power currents whereas the grounding (or green) conductor does not, except during fault conditions.

PENETRATION -- The passage through a partition or wall of an equipment or enclosure by a wire, cable, or other conductive object.

PLANE WAVE -- An electromagnetic wave which predominates in the far field region of an antenna, and with a wavefront which is essentially in a flat plane. In free space, the characteristic impedance of a plane wave is 377 ohms.

RACK -- A vertical frame on which one or more units of equipment are mounted.

RADIATION -- The emission and propagation of electromagnetic energy through space.

RADIATION RESISTANCE -- The resistance which, if inserted in place of an antenna, would consume the same amount of power that is radiated by the antenna.

RADIO FREQUENCY INTERFERENCE (RFI) -- RFI is manmade or natural, intentional or unintentional electromagnetic propagation which results in unintentional and undesirable responses from or performance degradation or malfunction of, electronic equipment.

REFLECTING LOSS -- The portion of the transition loss, expressed in dB, that is due to the reflection of power at a barrier or shield. Reflection loss is determined by the magnitude of the wave impedance inside the barrier relative to the wave impedance in the propagation medium outside the barrier.

RF-TIGHT -- Offering a high degree of electromagnetic shielding effectiveness.

SHIELD -- A housing, screen, or cover which substantially reduces the coupling of electric and magnetic fields into or out of circuits or prevents the accidental contact of objects or persons with parts or components operating at hazardous voltage levels.

SHIELDING EFFECTIVENESS -- A measure of the reduction or attenuation in the electromagnetic field strength at a point in space caused by the insertion of a shield between the source and that point.

SIGNAL REFERENCE SUBSYSTEM -- A conductive sheet or cable network/mesh providing an equipotential reference for C-E equipments to minimize interference and noise.

SIGNAL RETURN -- A current-carrying path between a load and the signal source. It is the low side of the closed loop energy transfer circuit between a source-load pair.

STRUCTURE -- Any fixed or transportable building, shelter, tower, or mast that is intended to house electrical or electronic equipment or otherwise support or function as an integral element of an electronics complex.

SUPPORTING STRUCTURES, ELECTRICAL -- Normally nonelectrified conductive structural elements near to energized electrical conductors such that a reasonable possibility exists of accidental contact with the energized conductor. Examples are conduit and associated fittings, junction and switch boxes, cable trays, electrical/electronic equipment racks, electrical wiring cabinets, and metallic cable sheaths.

TRANSDUCER -- A device which converts the energy of one transmission system into the energy of another transmission system.

THUNDERSTORM DAY -- A local calendar day on which thunder is heard.

UNDESIRED SIGNAL -- Any signal which tends to produce degradation in the operation of equipments or systems.

WAVE IMPEDANCE -- The ratio of the electric field strength to the magnetic field strength at the point of observation.

ZONE OF PROTECTION -- (also known as CONE OF PROTECTION) That space that is below and adjacent to a lightning protection subsystem that is substantially immune to direct lightning discharges.

APPENDIX B

SUPPLEMENTAL BIBLIOGRAPHY

PART I. SUBJECT CROSS REFERENCE.

BONDING -- 13, 15, 28, 29, 30, 32, 39, 45, 54, 60, 61, 76, 91, 96, 113, 120, 129, 159, 161, 199, 203, 207, 208.

CATHODIC PROTECTION -- 10, 43, 51, 55, 94, 108, 136, 144, 168, 169, 176.

CORROSION -- 8, 53, 56, 63, 75, 124, 143, 144, 164, 168, 169, 214.

EARTH ELECTRODE SUBSYSTEMS -- 11, 24, 25, 31, 33, 44, 51, 52, 63, 64, 65, 66, 70, 71, 85, 86, 87, 89, 101, 107, 120, 131, 137, 138, 145, 148, 170, 187, 190, 196, 205, 212, 213.

EMP -- 37, 47, 57, 58, 67, 68, 73, 74, 114, 128, 139, 140, 141, 150, 156, 163, 186, 202.

EQUIPMENT SHIELDING -- 3, 6, 7, 9, 14, 35, 36, 40, 41, 46, 49, 78, 83, 84, 90, 97, 99, 103, 109, 112, 115, 116, 122, 127, 133, 134, 135, 146, 151, 152, 153, 158, 159, 172, 173, 174, 175, 180, 184, 194, 198, 204, 211.

FACILITY SHIELDING -- 9, 15, 82, 110, 115, 158, 183, 184, 203.

LIGHTNING PROTECTION -- 2, 5, 12, 16, 20, 21, 22, 23, 24, 26, 31, 69, 79, 80, 102, 120, 130, 147, 149, 154, 166, 179, 182, 185, 197, 200, 201, 209.

PERSONNEL SAFETY -- 20, 42, 44, 50, 66, 77, 80, 81, 95, 104, 117, 118, 119, 120, 121, 125, 142, 171, 191, 193.

POWER SYSTEMS GROUNDING -- 1, 4, 17, 18, 19, 34, 38, 62, 72, 92, 93, 95, 98, 100, 105, 106, 111, 117, 120, 123, 126, 132, 155, 160, 162, 165, 167, 177, 178, 181, 188, 195, 210.

SIGNAL GROUNDING -- 27, 42, 48, 49, 59, 72, 88, 109, 120, 159, 189, 192, 198, 203, 204, 206.

PART II. LISTINGS.

1. Adama, A. W. D. and Lintott, A. P., “Digital Programme for the Calculation of Earthing Systems Using Concentric Rings,” De Ingenieur (Hague), Vol 83, No. 20, May 1971, pp E51-56.

2. Adams, Nixon A., “Introduction to Lightning and Other Electrostatic Phenomena,” AWS-TR-224, Air Weather Service, Scott APB IL, August 1971, AD 730 622.

3. Adams, W. S., "Graphical Presentation of Electromagnetic Shielding Theory," Proceedings of the Tenth Tri-Service Conference on Electromagnetic Compatibility, ITT Research Institute, Chicago IL, November 1964, pp 421-449, AD 615 627.

4. AIEE Committee Report, "Application Guide on Methods of Substation Grounding," AIEE Trans., Vol 73, Pt IIIA, April 1954, pp 271-277.

5. AIEE Committee on Protection Devices, "Correlation of System Overvoltages and Systems Grounding Impedances," AIEE Trans., Vol 62, January 1943, pp 17-24.

6. Albin, Arnold L., "Applying Shielded Cables to Reduce Interference," Electronic Design, Vol 10, No. 1, January 1962, pp 48-51.

7. Albin, Arnold L. "Designing Noise Free Enclosure Openings," Electronics, Vol 31, No. 35, August 1958, p 48.

8. Anderson, D. G., "Corrosion," Journal of Electronics and Control, Vol 5, November 1958, pp 443-456.

9. Angelakos, D.J., "Radio Frequency Shielding Properties of Metal Honeycomb Materials and of Wire Mesh Enclosure," Unclassified Proceedings of the Sixth Conference on Radio Interference Reduction and Electronic Compatibility, Armour Research Foundation of Illinois Institute of Technology (now IITRI), Chicago IL, October 1960, pp 265-280.

10. Appleman, G. and Litrides, S.J., "All Steel Network Ground Substation," Electrical World, Vol 143, May 1955, pp 59-61.

11. Armstrong, H. R., "Grounding Electrode Characteristics from Model Tests," AIEE Trans., Vol 72, Pt III, December 1953, pp 1301-1306.

12. Arrowsmith, E. G., "Lightning Prediction and Protection Techniques," Tor-669(6540)-4, Contract AF 04(695)-669, Aerospace Corporation, El Segundo CA, October 1965, AD 474 610.

13. Bailey, J.C. and Gregory P., "Fundamentals of Jointing Processes for Aluminum," Symposium on Aluminum and Its Alloys in Electrical Engineering, Aluminum Development Association, London, May 1957, pp 39-56.

14. Barker, G. and Gray, E., "Preliminary Measurements Related to Procedures for Measuring Systems Susceptibility," Proceedings of the Eighth Tri-Service Conference on Electromagnetic Compatibility, Armour Research Foundation of Illinois Institute of Technology (now IITRI), Chicago IL, October 1962, pp 218-240, AD 298 763.

15. Barnett, J. and Burrows, D., "Interference Problems Due to Structure in High R. F. Fields," Rpt No. C-24-F, Contract AF 30(602)-2691, White Electromagnetics, Inc, Bethesda MD, February 1963, AD 299 257.

16. Beck, Edward, "How and Where to Provide For Lightning Protection," Maintenance Magazine, October 1966, pp 28-31.

17. BelIaschi, P. L., "Impulse and 60-Cycle Characteristics of Driven Grounds," AIEE Trans., Vol 60, March 1941, pp 123-128.

18. BeIIaschi, P. L., Armington, R.E., and Snowden, A.E., "Impulse and 60-Cycle Characteristics of Driven Grounds--II," AIEE Trans., Vol 61, June 1942, pp 349-363.

19. BeIIaschi, P. L. and Armington, R.E., "Impulse and 60-Cycle Characteristics of Driven Grounds--III, Effect of Lead in Ground Installation," AIEE Trans., Vol 62, June 1943, pp 334-344.

20. Berio, G., "The Use of Ionization in The Air for Lightning Protection," Isotopes and Radiation Technology, Vol 8, No. 2, Winter 1970-71.

21. Beville, J.W., "Multiple Lightning Strokes Change Relay Schemes," Electrical World, Vol 168, No. 23, December 1967, pp 29-31, 73.

22. Bewley, L. V., "Critique of Ground Wire Theory," AIEE Trans, Vol 50, No. 1, March 1931, pp l-22.

23. Bewley, L.V., "The Counterpoise," General Electric Review, Vol 37, No. 2, February 1934, pp 73-81.

24. Bewley, L.V., "Theory and Tests of the Counterpoise," Electrical Engineering, Vol 53, No. 8, August 1934, pp 1163-1172.

25. Bliamptis, E.E., "A New Method of Determining the Physical Parameters of Large Soil and Rock Samples in Situ," AFCRL-72-0734, Contract CDNA0007 76390101, Air Force Cambridge Research Laboratories, Bedford MA, December 1972, AD 756 830.

26. Bodle, D., "Electrical Protection Guide for Land-Based Radio Facilities," Joslyn Electronic Systems, Santa Barbara Research Park, PO Box 817, Goleta CA 93017, 1971.

27. Boise, W.K. and Hunter, E.M., "System Electrical Neutral Grounding," Electrical Light and Power, Vol 21, November 1943, pp 44-49.

28. Bond, N. T. and McGeary, F.L., "Nickel Plating for Improved Electrical Contact to Aluminum," Conference Record of Third Annual Meeting of the IEEE Industry and General Applications Group, Chicago IL, October 1968, pp 375-387.

29. "Bonding and Grounding, Standard for," KSC-STD-E-0012, NASA, John F. Kennedy Space Center, Kennedy Space Center FL 32899, December 1969.

30. Bonwitt, W. F., "An Experimental Investigation of the Electrical Performance of Bolted Aluminum-to-Copper Connections," AIEE Trans, Vo1 67, Pt II, 1948, pp 1208-1219.

31. Boyce, C.F., "The Earthing of Telephone Systems with Particular Reference to South Africa," Transactions of the S.A. Institute of Electrical Engineers, Vol 43, December 1952, pp 349-373.

32. Boyer, O.A. and Korges, E., "Connector Performance by Types," AIEE Trans, Vol 75, Pt III, October 1956, pp 907-913.

33. Braine, M.R., "The Siting of Station Earths for Telecommunication Installations," Point-to-Point Telecommunications, Vol 13, No. 1, January 1969, pp 47-56.

34. Bremer, G.D., Johnson, I.B., and Lyon, S.V., "Grounding of Subtransmission Systems," AIEE Trans, Vol 73, Pt III, February 1955, pp 1580-1585.

35. Bridges, J.E., "Study of Low-Frequency Fields for Coaxial and Twisted Pair Cables," Proceedings of the Tenth Tri-Service Conference on Electromagnetic Compatibility, IIT Research Institute, Chicago IL, November 1964, pp 475-495, AD 615 627.

36. Brogdon, A.M., Cook, J.C., and Douds, C.F., "A Survey of Interference Reduction Techniques," RADC-TDR-62-84, Contract AF 30(602)-2445, HRB-Singer, Inc, State College PA, June 1962, AD 277 558.

37. Brown, G. L., "Some Aspects of EMP Hardness Assurance," PEM-23, Available from the USAEC Technical Information Center, PO Box 62, Oak Ridge TN 37830.

38. Brown, Harold H, and Gross, Eric T.B., "Practical Experience with Resonant Grounding in a Large 34.5 Kv System," AIEE Trans, Vol 69, Pt II, 1950, pp 1401-1406.

39. Brunot, A.W. and Buckland, F.F., "Thermal Contact Resistance of Laminated and Machined Joints," Transactions of the American Society of Mechanical Engineers, Vol 71, April 1949, pp 253-257.

40. Burruano, S.J., Bailey, E.F., and Cramer S., "Shielding and Potting," Electronics, Vol 27, No. 10, October 1954, p M-23.

41. Carlson, K. W., "The Effect of Weld Defects on RFI Shielding Effectiveness," IA0 CE-CERL-73-2, Construction Engineering Research Laboratory, Champaign IL, January 1974, AD 733 716.

42. Carpenter, L.J., "Equipment Grounding for Industrial Plants," Electrical Engineering, Vol 73, No. 3, March 1954, pp 256-260.

43. "Cathodic Protection of Communication Cables," Technical Manual KSC-TM4-275-MI, NASA, John F. Kennedy Space Center, Kennedy Space Center FL 32899, March 1972.

44. Cave, P. W., "Earthing Practice," Electrical Review, Vol 153, No. 15, October 1953, p 793.

45. Cherry, Lloyd B., "Dynamic Resistance Test of Spot Welds," IEEE Trans on Communication and Electronics, Vo1 82, May 1963, pp 121-123.

46. Clark, D.B. and Hitchcock, R.D., Continuous Wrapping of Transmission Line Conductors with High-Mu Tape For Large Radio-Interference Attenuation," Unclassified Proceedings of the Fifth Conference on Radio Interference Reduction and Electronic Compatibility, Armour Research Foundation of Illinois Institute of Technology (now IITRI), Chicago IL, October 1959, pp 560-577.

47. Clark, D.B. and Lassiter, H.A., "Nuclear Electromagnetic Pulse (NEMP) Protection for Communications Facilities and Equipment," 1968 WESCON Proceedings, Vol 12, Pt 4, Session 19/4, IEEE, New York NY.

48. Clifton, Harvey W., "Design Your Grounding System," IEEE Trans on Aerospace, Vol 2, No. 2, April 1964, pp 589-596.

49. Coe, James C., "Electrical Interference in Instrumentation - Its Causes and Remedies (Parts 1 and 21," ISA Journal, November 1954, pp 49-50 (Part l), and December 1954, pp 33-35 (Part 2).

50. Coleman, O.K., "Why Ground," Electrical Engineering, Vol 75, No. 5, May 1956, pp 418-424.

51. Coleman, W.E. and Frostick, H.G., "Electrical Grounding and Cathodic Protection at the Fairless Works," AIEE Trans, Vol 74, Pt II, March 1955, pp 19-24.

52. "Comparative Properties of Grounding Electrodes," Engineering Reference Sheet No. 48-5, Electrical World, Vol 129, January 1948, p 72.

53. Compton, K.G., "Electrical Measurements and Their Interpretation In Underground Cable Corrosion Problems," Corrosion, Vol 14, No. 5, May 1958, pp 237t - 244t.

54. Connor, T.J. and Wilson, W.R., "Performance of Electrical Joints Utilizing New Silver Coating on Aluminum Conductors," AIEE Trans, Vol 72, Pt III, August 1953, pp 702-712.

55. "Control of External Corrosion on Underground or Submerged Metallic Piping Systems, Recommended Practice," NACE Standard RP-01-69, National Association of Corrosion Engineers, 2400 West Loop South, Houston TX 77027.

56. "Corrosion Control Aspects of Underground Residential Electrical Distribution Systems," Materials Protection and Performance, Vol 10, No. 1, January 1971, pp 38-40.

57. Dahnke, J.E., "Considerations and Techniques in Allotment of EMP Protection Requirements to Subsystem End Items in Well-Shielded Ground-Based Systems," TRW Inc, San Bernandino CA. Copies available from USAEC Technical Information Center, PO Box 62, Oak Ridge TN 37830.

58. Davidson, G.G. and Hunter, E.T., "Characterization of EMP Protection Devices," ECOM-4128, US Army Electronics Command, Fort Monmouth NJ, July 1973, AD 763 886.

59. Demrow, KS., "Protecting Data from the Ground Up," Electronics, Vol 41, No. 9, April 1968, pp 58-64.

60. Dimarzio, Alfred W., "Behavior of Conductive Epoxy for Shielding and Bonding," Frequency Technology, Aug/Sept 1970, pp 18-23.

61. Dixon, C.R. and Nelson, F.G., "The Effect of Elevated Temperature of Flash-Welded Aluminum Copper Joints," AIEE Trans, Vol 78, Pt II, 1959, pp 491-495.

62. Dorey, P.M., "System Grounding in Industrial Plants," Electrical Engineering, Vol 72, No. 2, December 1953, pp 1098-1103.

63. Drisko, R.W. and Hanna, A.E., "Field Testing of Electrical Grounding Rods," NCEL-TR-660, Naval Civil Engineering Laboratory, Port Hueneme CA, February 1970, AD 702 040.

64. Dwight, H.B., "The Calculation of Resistances to Ground and of Capacitance," Journal of Math Physics, Vol 10, 1931, pp 50-74.

65. Eaton, J. R., "Grounding Electric Circuits Effectively," General Electric Review, Vol 44, Nos. 6, 7, and 8, June 1941, pp 323-327, July 1941, pp 397-404, August 1941, pp 451-456.

66. Elek, A., "Proving the Adequacy of Station Grounds," AIEE Trans, Vol 44, June 1941, pp 323-327.

67. EMP (Electromagnetic Pulse) Preferred Test Procedures, DNA 3286H, Contract No. DNA 001-72-C-0089, IIT Research Institute, 10 West 35th Street, Chicago IL 60616, August 1974, AD 787 482.

68. "EMP Threat and Protective Measures," TR-61, Defense Civil Preparedness Agency, Washington DC 20301, August 1970.

69. Erickson, J., "Lightning and High Voltage Surge Protection for Balanced Digital Transmission Devices"' ECOM-4027, US Army Electronics Command, Fort Monmouth NJ, September 1972, AD 752 448.

70. Pagan, E.J. and Lee, R.H., "Use of Concrete-Enclosed Reinforcing Rods as Grounding Electrodes," IEEE Trans on Industry and General Applications, Vol IGA-6, No. 4, July/August 1970, pp 337-348.

71. Fawssett, E., et al., "Practical Aspects of Earthing," Journal of the IEE, Vol 87, No. 526, October 1940, pp 357-400.

72. Ficchi, Rocco F., "The Grounding of Electronic Equipment," Proceedings of the Eighth Tri-Service Conference on Electromagnetic Compatibility, Armour Research Foundation of Illinois Institute of Technology (now IITRI), Chicago IL, October 1962, pp 643-669, AD 298 763.

73. FiegaI, H.E., et al., "Development of Design Criteria Relating to NEMP Effects on Power Systems. Part I. Conductor Voltages Causes by Pulse Currents Flowing in a Steel Conduit," Contract No. DA-49-129-ENG-543, General Electric Company, Pittsfield MA, August 1965, AD 734 083.

74. FiegaI, H.E., "Development of Design Criteria Relating to NEMP Effects on Power Systems. Part II. Conductor Voltages Caused by Pulse Currents Flowing in a Conduit," Contract No. DA-49-129-ENG-543, General Electric Company, Pittsfield MA, January 1966, AD 734 084.

75. Fiorito, L.E., "Corrosion Aspects of HV DC on Buried Telephone Plant," IEEE Trans on Power Apparatus and Systems, Vol PAS-87, No. 1, January 1968, pp 35-40.

76. Flattau, W., "Radio Frequency Bonding Study," Report No. AO 1801, Contract NAS8-20055, Documentation Repository, Marshall Space Flight Center AL 35812.

77. Flippen, J.C., "Line Mock Up Aids Safe Grounding Sessions," Electrical World, Vol 170, No. 13, September 1968, p 31.

78. Follett, Roger C. and Beard, Lawrence, "Development of Extended Range Shielded Enclosures," Sprague Electric Company, North Adams MA, Technical Paper TP 69-9, 1969.

79. Foster, S.A., "A Lightning Protection Unit For Use with Industrial Process Control Equipment," IEE Conference Publication, No. 65, 1970, pp 43-45.

80. Golde, R.H., "A Plain Man's Guide To Lightning Protection," Electronics and Power, Vol 15, March 1969, pp 84-86.

81. Golde, R.H., "Protection of Structures Against Lightning," Proc. IEE, Vol 115, No. 10, October 1968, pp 1523-1529.

82. Good, T.M., "A Method of Evaluating The Effectiveness of Radio-Frequency Gasket Materials," Unclassified Proceedings of the Fifth Conference on Radio Interference Reduction and Electronic Compatibility, Armour Research Foundation of Illinois Institute of Technology (now IITRI), Chicago IL, October 1959, pp 6.01-621.

83. Gooding, J.H. and Glade, H.B., "Shielding of Communications Cables," AIEE Trans, Vol 74, July 1955, pp 378-387.

84. Griffith, David E., "Surface Transfer Impedance of Cable Shields Having a Longitudinal Seam," IEEE Trans on Communication Technology Vol COM-19, No. 4, August 1971, pp 517-522.

85. Gross, Eric T.B., et al., "Grounding Grids for High-Voltage Stations," AIEE Trans, Vol 72, Pt III, August 1953, pp 799-809.

86. Gross, Eric T.B. and Hollitch, Robert S., "Grounding Grids for High-Voltage Stations - Resistance of Rectangular Grids," AIEE Trans, Vol 75, Pt III, 1947, October 1956, pp 926-935.

87. Gross, Eric T.B. and Wise, Richard B., "Grounding Grids for High-Voltage Stations - Resistance of Large Rectangular Plates," AIEE Trans., Vol 74, Pt III, October 1955, pp 801-809.

88. "Grounding of Instrument Transformer Secondary Circuits," AIEE Trans, Vol 66, 1947, pp 419-420.

89. Gupta, V. P. and Gary, R. L., "Earth Resistance of Various Forms of Electrodes," Proc. IEE, Vol 116, No. 8, August 1969, pp 1487-1492.

90. Haber, F. and Goldhirsh, J., "Studies of Electromagnetic Compatibility of Equipment and Systems," Rpt No. 61-11, Contract Nobsr-85170, Moore School of Electrical Engineering, U. of Pennsylvania, Philadelphia PA, 1961, AD 261 048.

91. Hamada, Yoshia, et al., "Welded Joint and Termination for Aluminum Power Cables," Hitachi Rev., Vol 20, No. 11, 1971, pp 465-471.

92. Harrison, L. H., "The Effect of Reactive Components in the Measurements of Grounding Circuits," AIEE Trans, Vol 72, Pt II, November 1953, pp 340-345.

93. Harrison, L.H., "The Search for Better Frame-Grounding Methods," Coal Age, February 1955, pp 84-87.

94. Headlee, J.E., "Cathodic Protection For Steel Mill Grounding Systems," Iron and Steel Engineer, Vol 31, No. 3, March 1954, pp 113-115.

95. Heddesheimer, H.E., "A Compendium of Grounding Techniques for Personnel and Equipment Protection," AIEE Trans, Vol 76, Pt III, February 1958, pp 1225-1230.

96. Heller, Fred, "Compression Wye Splicing to Insulated Aluminum," AIEE Trans, Vol 73, Pt IIIB, October 1954, pp 1218-1223.

97. Herring, T.H., "A Method for Controlling Airplane Wiring and Equipment Placement to Eliminate A-C Magnetic Field Interference," Proceedings of the Fourth Conference on Radio Interference Reduction and Electronic Compatibility, Armour Research Foundation of Illinois Institute of Technology (now IITRI), Chicago IL, October 1958, pp 412-430.

98. Herring, T.H., "The Electrical Role of Structure in Large Electronic Systems," 1963 Symposium Digest, Fifth National Symposium on Radio Frequency Interference, IEEE, New York NY, June 1963.

99. Herring, T.H., "Controlling Magnetic Field Interference In Wiring," Electrical Manufacturing, Vol 64, No. 4, October 1959, pp 127-129.

100. Hertzberg, Lee B., "The Water Utilities Look at Electrical Grounding," IEEE Trans on Industry and General Applications, Vol IGA-6, No. 3, May/June 1970, pp 278-281.

101. Higgs, P.J., "An Investigation of Earthing Resistances," Journal of the IEE, Vol 68, February 1930, pp 736-750.

102. "High Voltage Lightning Grounding Device," Brief 71-10136, Lewis Research Center, May 1971. Copies available from Technology Utilization Office, NASA, Code KT, Washington DC 20546.

103. HiII, E.L., "The Shielding of Radio Waves by Conductive Coatings," IEE Trans on Antennas and Propagation, Vol 3, No. 2, April 1955, pp 72-76.

104. Hopps, J.A., "Electrical Hazards in HospitaI Instrumentation," Proceedings of the 1969 Symposium on Reliability, Chicago IL, January 1969, pp 303-307.

105. Hoopes, J. E., "Modernize Substation Grounding Practice," Electrical World, Vol 150, No. 8, August 1958, pp 66-67.

106. "How Good Are Your System Grounds?" Power, Vol 100, No. 10, October 1956, pp 120-121.

107. Humpheries, J.D., "Earth-EIectrode Systems for Large Electric Stations," Proc. IEE, Vol 104, Pt A, October 1957, pp 383-399.

108. Husock, B., "The Effect of Electrical Grounding Systems on Under-Ground Corrosion and Cathodic Protection," AIEE Trans, Vol 79, Pt II, March 1960, pp 5-10.

109. Ida, Edward S., "Reducing Electrical Interference," Control Engineering, Vol 9, No. 2, February 1962, pp 107-111.

110 Jakubee, L.G., Jr, et al., "Preposed Specifications for Electromagnetic Shielding of Enclosures and Buildings," Contract NBY-32220, Genistron, Inc, Los Angeles CA, July 1963.

111. Jensen, Claude, "Grounding Principles and Practices II - Establishing Grounds," Electrical Engineering, Vol 64, No. 2, February 1945, pp 68-74.

112. Jorgenson, C.M., "Shielding in Modern Computer Design," Automatic Control, Vol 9, No. 6, December 1958, pp 46-50.

113. "Junctions in Aluminum Cable," Light Metals, Vol 5, No. 57, October 1942, pp 388-395.

114. Kalab, B., "AnaIysis of Failure of Electronic Circuits From EMP-Induced Signals," HDL-TR-1615, Harry Diamond Laboratories, Washington DC 20438, August 1973, AD 778 754.

115. Kanellakos, D.P., et al., "New Techniques for Evaluating the Performance of Shielded Enclosures," Unclassified Proceedings of the Fifth Conference on Radio Interference Reduction and Electronic Compatibility, Armour Research Foundation of Illinois Institute of Technology (now IITRI), Chicago IL, October 1959, pp 526-559.

116. Kaplit, M., "Electromagnetic Coupling Between Coaxial Single-Wire, Two-Wire, and Shielded Twisted Pair Cables," Proceedings of the Ninth Tri-Service Conference on Electromagnetic Compatibility, IIT Research Institute, Chicago IL, October 1963, pp 183-192, AD 434 850.

117. Kaufmann, R.H., "Equipment Grounding: Is It Really Protecting Your Plant?" Power, Vol 99, No. 2, February 1955, pp 77-80.

118. Kaufmann, R.H., "Hazards In Industrial Electric Systems," Safety Maintenance and Production, Vol 108, No. 2, August 1954, p 26.

119. Kaufmann, R.H., "Now It's Equipment Grounding," Factory Management and Maintenance, Vol 115, No 12, December 1957, pp 150-153.

120. Keller, W.L., "Grounding and Bonding Requirements of Military C-E Facilities for Protection Against Lightning," International Aerospace and Ground Conference on Lightning and Static Electricity, June 1984, Orlando FL, pp 18-1 to 18-20.

121. KIine, R, L. and Friauf, J. B., "Electric Shock, Its Causes and Its Prevention," BuShips Journal, July 1954, pp 4-14.

122. Klingaman, G.W. and Williams, G.H., "Shielding of Dielectric Heating Installation," Electronics, Vol 185 May 1945, pp 106-109.

123. Krida, H. and McCurry, E.T., "A New Grounding and Testing Device for Metal-Clad Switchgear," AIEE Trans., Vol 69, Pt I, 1950, pp 401-415.

124. Kuhn, RJ., "Grounding and Corrosion Protection on Underground Electric Power Cable Sheaths and Oil- or Gas-Filled Pipe Lines," AIEE Trans, Vol 71, Pt III, December 1952, pp 990-993.

125. Lee, R.H., "Electrical Grounding: Safe or Hazardous?" Chemical Engineering, Vol 76, No 16, July 1969.

126. Loucks, W.W. and Lemire, W.A.R., "Transmission and Distribution Grounding in the Hydro-Electric Power Commission of Ontario," AIEE Trans, Vol 70, Pt II, 1951, pp 1493-1499.

127. Madden, Charles, "EMI Shielding with Electrically Conductive Pressure Sensitive Tapes," Proceedings of the Eighth Electrical Insulation Conference, IEEE 68C6-EI, IEEE, New York NY, December 1968, pp 25-27.

128. Marable, J.H., et al., "Effects of Electromagnetic Pulse (EMP) on a Power System," Interaction Note 173. Available through Air Force Weapons Laboratory, Kirtland AFB NM 87117.

129. Marx, CT., "Some Problems of Aluminum Connection," Electrical Energy, Vol 1, No. 4, December 1956, pp 109-112.

130. McCann, G.D., Beck, E., and Finzi, L.A., "Lightning Protection For Rotation Machines," AIEE Trans, Vol 63, June 1944, pp 319-332.

131. McCrockIin, A.J., Jr and Wenlandt, C.W., "Determination of Resistance to Ground of Grounding Grids," AIEE Trans, Vol 71, Pt III, December 1952, pp 1062-1064.

132. McGreer, T.H., "Grounding of Power Station 4, 160-Volt Auxiliary Systems," AIEE Trans, Vol 76, Pt III, February 1958, pp 1459-1463.

133. Mendez, H.A., "Shielding Theory of Enclosures with Apertures," AFOSR-TR-0100, Contract AFOSR-70-1935, California Institute of Technology, Pasadena CA, December 1973, AD 773 770.

134. Merewether, David E., "Design of Shielded Cables Using Saturable Ferromagnetic Materials" IEEE Trans on Electromagnetic Compatibility, Vol EMC-12, No. 3, August 1970.

135. Merrel, Edwin J., "Semiconducting Shielding for A-C Power Cable," AIEE Trans., Vol 65, August/September 1946, pp 605-608.

136. Morgan, J. H., Cathodic Protection, Leonard Hill (Books) Limited, London, 1959.

137. Morgan P.D. and Taylor, H.G., "Measurement of the Resistance of Earth Electrodes," World Power, Vol 32, No. 121, January 1934, pp 22-26.

138. Morgan, P.D. and Taylor, H.G., "The Resistance of Earth Electrodes," Proc IEE, Vol 72, June 1932, pp 515-518.

139. Nelson, D. B., "A Program to Counter the Effects of Nuclear Electromagnetic Pulse in Commercial Power Systems," Report No. ORNL-TM-3552 (Pt l), Oak Ridge National Laboratory, Oak Ridge TN 37830, October 1972. Available from National Technical Information Service, Springfield VA 22151.

140. Nelson, D.B., "Effects of Nuclear EMP on AM Broadcast Stations in the Emergency Broadcast System," Report No. ORNL-TM-2830, Oak Ridge National Laboratory, Oak Ridge TN 37830, July 1971, AD 717 319.

141. "NEMP Protection Inspection Guide for Safeguard TSE Systems and Equipment," HNDDSP-71-42-SE, US Army Corps of Engineers, Huntsville Division, Huntsville, AL 35807, May 1971.

142. Nueland, J.G., "ElectricaI Shock and Reliability Considerations in Clinical Instruments," Proceedings of the 1969 Symposium on Reliability, Chicago IL, January 1969, pp 308-313.

143. Nonken, G.C., et al., "Corrosion of URD Cables," Electrical World, Vol 171, No. 18, May 1969, pp 88-106.

144. Nonken, Gordon C., "Fundamentals of Corrosion and Corrosion Control for Residential Subsurface Transformers," IEEE Trans on Power Apparatus and Systems, Vol PAS-88, No. 3, March 1969, pp 207-218.

145. Nozhevnikov, V.Y., "Grounding ElectrotechnicaI Assemblies Under Permafrost Conditions," Mezhduvedomstvennoe Soveshehanie Po Merzlotovedeniyu 7th, Moscow, 1956, Materialy Po Inzhenernomu Merzlotovedeniyu Nauka, 1959, pp 172-176. Translated by US Joint Publications Research Service for US Army Cold Regions Research and Engineering Laboratory, Hanover NH, 1971, AD 722 221.

146. Oakley, R.J., "Surface Transfer Impedance and Cable Shielding Design," Wire JournaI, Vol 4, No. 3, March 1971, pp 44-47.

147. Ouyang, M., "Lightning Protection of Cable-Connected High-Voltage Distribution Substations by Surge Diverters," Proc IEE, Vol 117, No. 8, August 1970, pp 1693-1702.

148. Ouyang, M., "Measurement of the Resistance of an Earth Electrode System Covering a Large Area," Proc IEE, Vol 116, No. 11, November 1969, p 1984.

149. Paterson, H.A. and Hunter, E.M., "Lightning Arrestor Application and System Overvoltages," Electric Light and Power, Vol 19, November 1941, pp 60-64, 66.

150. Peabody, P.B., "Management Plan and Techniques for EMP Protection of Systems," Lockheed Missiles and Space Company Inc, PO Box 504, Sunnyvale CA 94088. Available as PEM-19, Lawrence Livermore Laboratory, Livermore CA 94550.

151. Peach, N., "Cable Shielding Innovations Promise Greater Reliability," Power, Vol 115, No. 9, September 1971, pp 94-95.

152. Pearlston, C.B., "Case and Cable Shielding, Bonding, and Grounding Considerations in Electromagnetic Interference," IKE Trans on Radio Frequency Interference, Vol RFI-4, No. 3, October 1960, pp 1-16.

153. Pfund, E.T., Jr, Russell, J.E., and Suverkrop, Capt Bard, "The Shielding Effectiveness of Concentric High Frequency Transmission Lines," Unclassified Proceedings of the Sixth Conference on Radio Interference Reduction and Electronic Compatibility, Armour Research Foundation of Illinois Institute of Technology (now IIITRI), Chicago IL, October 1960, pp 360-371.

154. Popp, E., "Lightning Protection of Line Repeaters," Record of IEEE International Conference on Communications, Vol 4, 1968, pp 169-174.

155. "Present-Day Grounding Practices on Power Systems," AIEE Trans, Vol 66, 1947, pp 1525-1551.

156. "Protection Instructions, EMP/RFI Protection Information, USAEDH Hardness Program-EMP," HNDDSP-72-145-ED-R, Black and Veatch, Consulting Engineers, Kansas City MO, August 1973.

157. "Providing Protection Against an Electromagnetic Pulse (EMP)," Defense Civil Preparedness Agency, Washington DC 20301.

158. Radford, E.R., "Research Investigations of the Radio Frequency Shielding Effectiveness of Screening Materials," Proceedings of the Second Conference on Radio Interference Reduction, Armour Research Foundation of Illinois Institute of Technology (now IITRI), Chicago IL, March 1956, pp 297-307.

159. Radford, E.R., "RF Interference-Free Design Techniques in Radar Systems," Proceedings of the Third Conference on Radio Interference Reduction, Armour Research Foundation of Illinois Institute of Technology (now IITRII, Chicago IL, February 1957, pp 35-46.

160. "Recommended Grounding Practices for Single-Polarity D-C Structures," AIEE Committee Report, AIEE Trans, Vol 76, Pt III, October 1957, pp 784-790.

161. Reisener, William C., Jr, et al., "Radio Frequency Bonding," AFAL-TR-199, Contract AF 33(615)-1975, Franklin Institute Research Labs, Philadelphia PA, November 1965, AD 474 924.

162. Ricker, E.A., "Automatic Grounding and Air-Break Switches for Protection of Transformer Stations," AIEE Trans, Vol 68, Pt II, 1949, pp 851-857.

163. Robb, J.D., "Coordination of Lightning and EMP Protection in Airborne Systems Design," PEM-29, Lightning and Transients Research Institute, 2531 West Summer Street, St. Paul MN 55113. Available from USAEC Technical Information Center, PO Box 62, Oak Ridge TN 37830.

164. Roberts, Capt. Palmer W., "Improper Welding Systems Cause Corrosion," BuShips Journal, Vol 7, August 1958, pp 7-8.

165. Roberts, Maj L.G.T., “Earthing of Low and Medium Voltage Distribution Systems In Regions of High Soil Resistivity,” Royal Engineers JournaI, Vol 67, March 1953, pp 16-35.

166. Ruoss, E, and Vorwerk, H.J., “Protecting Open Circuit-Breakers Against Lightning,” Brown Boveri Rev., Vol 56, No. 9, September 1969, pp 424-433.

167 .Ryabkoua, E. Ya and Annenkov, V. Z., “Study of Counterpoise in Poorly Conducting Soil,” USSR Electric Technology, Vol 2, Pergamon Press, London, 1971, pp 133-143.

168. Schaefer, L.P., “Corrosion Can Conquer Your Grounding System,” Industry and Power, Vol 71, No. 1, June 1956, pp 20-23.

169. Schaefer, L.P., “Electrical Grounding Systems and Corrosion” AIEE Trans, Vol 74, Pt II, May 1955, pp 75-81.

170. Schahfer, R.M. and Knutz, W.H., “Charts Show Ground Rod Depth For Any Resistance In Advance,” Electrical World, Vol 114, No. 16, October 1940, pp 63-65.

171. Schirmer, A.H., “Protective Grounding of Electrical Installations on Customer’s Premises,” AIEE Trans, Vol 60, Pt I, 1950, pp 657-659.

172. Schreiber, O.P., "Designing and Applying RFI Shields and Gaskets,” Electronic Design, Vol 10, No. 20, September 1962, p 62.

173. Schreiber, O.P., “RFI Gasketing,” Electronic Design, Vol 8, No. 4, February 1960, pp 46-49.

174. Schreiber, O.P., “RF Tightness Using Resilient Metallic Gaskets,” Proceedings of the Second Conference on Radio Interference Reduction, Armour Research Foundation of Illinois Institute of Technology (now IITRI), Chicago IL, March 1956, pp 343-359.

175. Schulz, Richard B., Huang, George C., and Williams, Walter L., “RF Shielding Design” IEEE Trans on Electromagnetic Compatibility, Vol EMC-10, No. 1, March 1968, pp 168-176.

176. Schwarz, E.W. and Wainwright, R.M., “Cathodic Protection Circuits,” AIEE Trans, Vol 74, Pt II, November 1955, pp 311-315.

177. Schwarz, S.J., “Analytical Expressions for the Resistance of Grounding Systems,” AIEE Trans, Vol 73, Pt IIIB, August 1954, pp 1011-1016.

178. Schwarz, S.J., “Let’s Look to Station Grounding,” Electrical World, Vol 143, No. 18, May 1955, pp 55-58.

179. “Service Experience With Lightning Arresters Under Contaminated Conditions,” IEEE Trans on Power Apparatus and Systems, Vol PAS-90, No. 1, January/February 1971, pp 369-382.

180. “Shielding High-Frequency Circuits Can Be Effectively Engineered” Electrical Manufacturing, Vol 38, No 3, September 1946, pp 134-137.

181. Smith, B.H., "The Right Way to Ground Generator Neutrals," Power, Vol 99, No. 11, November 1955, pp 124-125.

182. Smith, M.N., "Practical Application and Effectiveness of Commercially Available Pulse Voltage Transient Suppressors," Technical Note N-1312, Contract YF53.534.005.01.001, Naval Civil Engineering Laboratory, December 1973, AD 773 074.

183. Spring, W.S., "Magnetic Shielding," Electrical Manufacturing, Vol 61, No. 2, February 1958, pp 138-139, 158.

184. Sodaro, J.F., "Shielding, Nomograph," Electronics, Vol 27, No. 5, May 1954, p 190.

185. Sokolov, V. K., et al., "Protection of Communication Cables in Plastic Sheaths from Lightning Strikes," FTD-MT-24-0041-72, Foreign Technology Division, Air Force Systems Command, 1969, AD 750 642.

186. Stevens, D.J., "Overall Design Practices, Testing Philosophy and Management Plan in the EMP Hardening Approach for the B-l Aircraft," PEM-26, Los Angeles Aircraft Division, Rockwell International. Copies available from USAEC Technical Information Center, PO Box 62, Oak Ridge TN 37830.

187. Stratton, L.J., "Grounding Grids for High-Voltage Stations," AIEE Trans, Vol 72, Pt III, August 1953, pp 799-809.

188. Strong, W.F., "Neutral Grounding Methods for Industrial Power Systems," Industry and Power, Vol 58, NO. 2, February 1950, pp 90-92.

189. "Study and Evaluation of Radio Frequency Grounding Systems," Contract NBY-17828, Interference Testing and Research Laboratory Inc, Boston MA, 1960, AD 620 826.

190. Tagg, C.F., "Measurement of the Resistance of Physically Large Earth Electrode Systems," Proc IEE, Vol 117, No. 11, November 1970, pp 2185-2190.

191. Taussign, Helen B., "Death From Lightning and the Possibility of Living Again," American Scientist, Vol 57, No. 3, Autumn 1969, pp 306-316.

192. Thacker, H.B., "Grounded Versus Ungrounded Low-Voltage A-C Systems," Iron and Steel Engineering, Vol 31, No. 4, April 1954, pp 65-72.

193. Thomson, A.G., "Earthing Electrical Installations," The Chemical Age, Vol 71, No. 1847, December 1954, pp 1198-1200.

194. "Total Shields Solve System Problems," Electronic Design News, May 1963, p 90.

195. Towne, H.M., "Impulse Characteristics of Driven Grounds," General Electric Review, Vol 31, No. 11, November 1968, pp 605-609.

196. Ufer, H.G., “Investigation and Testing of Footing-Type Grounding Electrodes for Electrical Installations,” IEEE Trans on Power Apparatus and Systems, Vol 83, No. 10, October 1964, pp 1042-1048.

197. “Unique Variable Resistor Bypasses High-Voltage Spikes,” Product Engineering, Vol 43, No. 2, February 1972, p 40.

198. Varone, R.A., “One-Point Ground System with R-F Shielding and Filtering,” Electrical Engineering, Vol 79, No. 12, December 1960, pp 1023-1033.

199. Verhiel, Adrian L., “Review of Bonding Practices of Ship-to-Shore Facilities Handling Petroleum Products,” IEEE Trans on Industry and General Applications, Vol IGA-5, No. 5, September/October 1969, pp 624-632.

200. Wagner, C.F., McCann, G.D., and Lear, C.M., “Shielding of Substations,” AIEE Trans, Vol 61, February 1942, pp 96-99.

201. Walter, B., “On Lightning Protection With a Remote Lightning Rod,” NASA TT F-14, 065, National Aeronautics and Space Administration, Washington DC, December 1971, N72-12383.

202. Warner, G.L. and Doskocil, A. C., “EMP Hardening Approach for SAM-D,” PEM-35, Raytheon Company, Missile Systems Division. Copies available from USAEC Technical Information Center, PO Box 62, Oak Ridge TN 37830.

203. Weinbaum, B., “ICBM Checkout Equipment Errors Due to Interference,” Unclassified Proceedings of the Sixth Conference on Radio Interference Reduction and Electronic Compatibility, Armour Research Foundation of Illinois Institute of Technology (now IITRI), Chicago IL, October 1960, pp 237-255.

204. Weiss, Gerald, “Wiring Design to Avoid Pickup,” Product Engineering, Vol 26, No. 11, Product Design Handbook Issue, October 1955, pp 16-19.

205. Weiner, Paul, “A Comparison of Concrete Encased Grounding Electrodes to Driven Ground Rods,” IEEE Trans on Industry and General Applications, Vol lGA-6, No. 3, May-June 1970, pp 282-287.

206. Wilson, Paul B., Jr, “Practical Approach to Interference Prediction and Suppression,” Electronics, Vol 33, No. 37, September 1960, pp 84-87.

207. Wilson, T.R., "Electric Bonding Requirements for Avoidance of Fuel-Air Explosions,” Supplement to IEEE Trans Aerospace and Electronic Systems, Vol AES-3, No. 6, November 1967, pp 590-598.

208. Wilson, T. R., Turner, J. R., and Skene, E. M., "Low Resistance Electric Bonds,” Supplement to IEEE Trans Aerospace and Electronic Systems, Vol AES-3, No. 6, November 1967, pp 599-606.

209. Wood, A.B., “Lightning and the Transmission Engineer,” Electronics and Power, Vol 15, June 1969, pp 195-200.

210. Wynne, J.G., "The Purpose and Design of a Substation Ground Network," Pulp and Paper Magazine of Canada, Vol 57, No. 3, Convention Issue, 1956, pp 292-298.

211. Yamaguchi, T., "The Shielding Effect of a Pipe Cable," Electrical Engineering in Japan, Vol 88, No. 5, May 1968, pp 25-34.

212. Zaborszky, J., "Efficiency of Grounding Grids with Non-uniform Soil," AIEE Trans, Vol 74, Pt III, December 1955, pp 1230-1233.

213. Zaborszky, J. and Rittenhouse, J.W., "Design Charts for Determining Optimum Ground Rod Dimensions," AIEE Trans, Vol 72, Pt III, August 1953, pp 810-817.

214. Zastrow, O.W., "Direct Currents and Corrosion as Related to AC Electric System Grounding," Direct Current, Vol 2, No. 7, December 1955, pp 183-186.

APPENDIX C

TABLE OF CONTENTS FOR VOLUME I

CHAPTER 1 - FACILITY GROUND SYSTEM

Paragraph		Page
1.1	GENERAL	1-1
1.2	APPLICATION	1-1
1.3	DEFINITIONS	1-1
1.4	REFERENCEDDOCUMENTS.	1-1
1.5	DESCRIPTION	1-2
1.5.1	Facility Ground System	1-2
1.5.2	Grounding and Power Distribution Systems	1-3
1.5.3	Electrical Noise in Communications Systems	1-4
1.6	BONDING, SHIELDING, AND GROUNDING RELATIONSHIP	1-5
1.7	GROUNDING SAFETY PRACTICES	1-5

CHAPTER 2 - EARTHING AND EARTH ELECTRODE SUBSYSTEM

2.1	OBJECTIVES.	2-1
2.1.1	Lightning Discharge	2-1
2.1.2	Fault Protection	2-2
2.1.3	Noise Reduction	2-2
2.1.4	Summary of Requirements	2-2
2.2	RESISTANCE REQUIREMENTS.	2-5
2.2.1	General	2-5
2.2.2	Resistance to Earth	2-5
2.2.2.1	National Electrical Code Requirements	2-5
2.2.2.2	Department of Defense Communications Electronics Requirements	2-5
2.2.3	Lightning Requirements	2-5
2.3	SOIL RESISTIVITY	2-7
2.3.1	General	2-7
2.3.2	Typical Resistivity Ranges	2-7
2.3.3	Environmental Effects.	2-7
2.4	MEASUREMENT OF SOIL RESISTIVITY	2-8
2.4.1	General	2-8
2.4.2	Measurement Techniques.	2-8
2.4.2.1	One-Electrode Method.	2-8
2.4.2.2	Four-Terminal Method.	2-13
2.5	TYPES OF EARTH ELECTRODE SUBSYSTEMS	2-15
2.5.1	General	2-15
2.5.2	Ground Rods	2-15
2.5.3	Buried Horizontal Conductors.	2-15

TABLE OF CONTENTS (Continued)

Paragraph		Page
2.5.4	Grids	2-15
2.5.5	Plates	2-15
2.5.6	Metal Frameworks of Buildings	2-16
2.5.7	Water Pipes	2-16
2.5.8	Incidental Metals	2-16
2.5.9	Well Casings	2-16
2.6	RESISTANCE PROPERTIES	2-17
2.6.1	Simple Isolated Electrodes	2-17
2.6.1.1	Driven Rod	2-17
2.6.1.2	Other Commonly Used Electrodes	2-23
2.6.2	Resistance of Multiple Electrodes	2-23
2.6.2.1	Two Vertical Rods in Parallel	2-23
2.6.2.2	Square Array of Vertical Rods	2-27
2.6.2.3	Horizontal Grid (Mesh)	2-29
2.6.2.4	Vertical Rods Connected by a Grid	2-30
2.6.3	Transient Impedance of Electrodes	2-32
2.6.4	Effects of Nonhomogeneous (Layered) Earth	2-32
2.6.4.1	Hemispherical Electrode	2-32
2.6.4.2	Vertical Rod	2-33
2.6.4.3	Grids	2-33
2.7	MEASUREMENT OF RESISTANCE-TO-EARTH OF ELECTRODES	2-35
2.7.1	Introduction	2-35
2.7.2	Fall-of-Potential Method	2-35
2.7.2.1	Probe Spacing	2-36
2.7.2.2	Extensive Electrode Subsystems	2-42
2.7.2.3	Test Equipments	2-45
2.7.3	Three-Point (Triangulation) Method	2-46
2.8	OTHER CONSIDERATIONS	2-47
2.8.1	Surface Voltages Above Earth Electrodes	2-47
2.8.1.1	Step Voltage Safety Limit	2-47
2.8.1.2	Step Voltages for Practical Electrodes	2-49
2.8.1.2.1	Flush Vertical Rod	2-49
2.8.1.2.2	Buried Vertical Rod	2-53
2.8.1.2.3	Buried Horizontal Grid	2-55
2.8.1.3	Minimizing Step Voltage	2-56
2.8.2	Heating of Electrodes	2-57
2.8.2.1	Steady State Current	2-57
2.8.2.2	Transient Current	2-57
2.8.2.3	Minimum Electrode Size	2-59

TABLE OF CONTENTS (Continued)

Paragraph		Page
2.9	ELECTRODE ENHANCEMENT	2-59
2.9.1	Introduction	2-59
2.9.2	Water Retention	2-60
2.9.3	Chemical Salting	2-60
2.9.4	Electrode Encasement	2-62
2.9.5	Salting Methods.	2-63
2.16	CATHODIC PROTECTION	2-63
2.10.1	Introduction	2-63
2.10.2	Protection Techniques	2-65
2.10.3	Sacrificial Anodes	2-65
2.10.4	Corrosive Atmospheres	2-66
2.11	GROUNDING IN ARCTIC REGIONS.	2-66
2.11.1	Soil Resistivity	2-66
2.11.2	Improving Electrical Grounding in Frozen Soils	2-70
2.11.2.1	Electrode Resistance	2-71
2.11.2.2	Installation and Measurement Methods	2-71
2.11.2.2.1	Electrode Installation	2-71
2.11.2.2.2	Backfill	2-71
2.12	REFERENCES	2-75

CHAPTER 3 - LIGHTNING PROTECTION SUBSYSTEM

3.1	THE PHENOMENON OF LIGHTNING	3-1
3.2	DEVELOPMENT OF A LIGHTNING FLASH	3-3
3.3	INFLUENCE OF STRUCTURE HEIGHT	3-3
3.4	STRIKE LIKELIHOOD	3-4
3.5	ATTRACTIVE AREA	3-10
3.5.1	Structures Less Than 100 Meters High	3-10
3.5.2	Cone of Protection	3-11
3.6	LIGHTNING EFFECTS.	3-13
3.6.1	Flash Parameters	3-13
3.6.2	Mechanical and Thermal Effects	3-15
3.6.3	Electrical Effects.	3-17
3.6.3.1	Conductor Impedance Effects.	3-17
3.6.3.2	Induced Voltage Effects	3-18
3.6.3.3	Capacitively-Coupled Voltage	3-21
3.6.3.4	Earth Resistance	3-21
3.7	BASIC PROTECTION REQUIREMENTS	3-25
3.8	DETERMINING THE NEED FOR PROTECTION	3-26
3.8.1	Strike Likelihood	3-26

TABLE OF CONTENTS (Continued)

Paragraph		Page
3.8.2	Type of Construction	3-26
3.8.3	Criticalness to System Mission	3-27
3.9	APPLICABLECODES.	3-27
3.10	REFERENCES	3-28

CHAPTER 4 -FAULT PROTECTION SUBSYSTEM

4.1	FAULT PROTECTION.	4-1
4.1.1	Power System Faults	4-1
4.1.2	Ground-Fault-Circuit-Interrupter (GFCI)	4-3
4.2	EARTH CONNECTION	4-3
4.3	AC POWER LINE GROUND	4-3
4.4	TEST EQUIPMENT	4-5
4.5	REFERENCES	4-6

CHAPTER 5 - GROUNDING OF SIGNAL REFERENCE SUBSYSTEM

5.1	INTRODUCTION	5-1
5.2	CONDUCTOR CONSIDERATIONS.	5-1
5.2.1	Direct Current Resistance	5-1
5.2.2	Alternating Current Impedance	5-1
5.2.2.1	Skin Effect.	5-3
5.2.2.2	AC Resistance	5-5
5.2.2.3	Reactance	5-7
5.2.2.4	Proximity Effect	5-10
5.2.3	Resistance Properties vs Impedance Properties	5-10
5.2.4	Effects of Geometry	5-12
5.2.4.1	Stranded Cables	5-13
5.2.4.2	Rectangular Conductors	5-13
5.2.4.3	Tubular Conductors	5-13
5.2.4.4	Structural Steel Members	5-15
5.3	SIGNAL REFERENCE SUBSYSTEM NETWORK CONFIGURATIONS	5-15
5.3.1	Floating Ground	5-15
5.3.2	Single-Point Ground (for Lower Frequencies)	5-19
5.3.3	Multipoint Ground (for Higher Frequencies).	5-24
5.3.3.1	Equipotential Plane	5-26
5.3.3.2	Types of Equipotential Planes.	5-27
5.3.4	Floating System	5-28

TABLE OF CONTENTS (Continued)

Paragraph		Page
5.4	SITE APPLICATIONS	5-28
5.4.1	Lower Frequency Network	5-29
5.4.2	Higher Frequency Network	5-30
5.4.3	Frequency Limits	5-31
5.5	REFERENCES	5-32

CHAPTER 6 - INTERFERENCE COUPLING AND REDUCTION

6.1	INTRODUCTION	6-1
6.2	COUPLINGMECHANISMS.	6-5
6.2.1	Conductive Coupling	6-5
6.2.2	Free-Space Coupling	6-6
6.2.2.1	Near-Field Coupling.	6-6
6.2.2.2	Inductive Coupling	6-8
6.2.2.3	Capacitive Coupling.	6-11
6.2.2.4	Far-Field Coupling	6-14
6.3	COMMON-MODE NOISE.	6-17
6.3.1	Basic Theory of Common-Mode Coupling.	6-19
6.3.2	Differential Amplifier	6-23
6.4	MINIMIZATION TECHNIQUES	6-23
6.4.1	Reduction of Coupling	6-23
6.4.1.1	Reference Plane Impedance Minimization	6-23
6.4.1.2	Spatial Separation.	6-24
6.4.1.3	Reduction of Circuit Loop Area.	6-24
6.4.1.4	Shielding.	6-24
6.4.1.5	Balanced Lines	6-24
6.4.2	Alternate Methods	6-24
6.5	FACILITY AND EQUIPMENT REQUIREMENTS	6-25
6.6	REFERENCES	6-25

CHAPTER 7 - BONDING

7.1	DEFINITION OF BONDING.	7-1
7.2	PURPOSES OF BONDING	7-1
7.3	RESISTANCE CRITERIA.	7-3
7.4	DIRECT BONDS	7-4
7.4.1	Contact Resistance	7-6
7.4.1.1	Surface Contaminants	7-7
7.4.1.2	Surface Hardness	7-7
7.4.1.3	Contact Pressure	7-7

TABLE OF CONTENTS (Continued)

Paragraph		Page
7.4.1.4	Bond Area	7-8
7.4.2	Direct Bonding Techniques	7-10
7.4.2-l	Welding	7-10
7.4.2.2	Brazing	7-11
7.4.2.3	Soft Solder.	7-14
7.4.2.4	Bolts	7-14
7.4.2.5	Rivets	7-15
7.4.2.6	Conductive Adhesive	7-16
7.4.2.7	Comparison of Techniques	7-16
7.5	INDIRECT BONDS	7-16
7.5.1	Resistance.	7-19
7.5.2	Frequency Effects	7-19
7.5.2.1	Skin Effect.	7-19
7.5.2.2	Bond Reactance	7-19
7.5.2.3	Stray Capacitance	7-23
7.6	SURFACE PREPARATION	7-25
7.6.1	Solid Materials	7-26
7.6.2	Organic Compounds	7-26
7.6.3	Platings and Inorganic Finishes	7-29
7.6.4	Corrosion By-Products.	7-29
7.7	COMPLETION OF THE BOND	7-29
7.8	BOND CORROSION.	7-30
7.8.1	Chemical Basis of Corrosion	7-30
7.8.1.1	Electrochemical Series	7-31
7.8.1.2	Galvanic Series.	7-31
7.8.2	Relative Area of Anodic Member	7-34
7.8.3	Protective Coatings	7-34
7.9	WORKMANSHIP	7-34
7.10	SUMMARY OF GUIDELINES	7-36
7.11	REFERENCES	7-37

CHAPTER 8 - SHIELDING

8.1	FUNCTION OF AN ELECTROMAGNETIC SHIELD.	8-1
8.2	BASIC SHIELDING THEORY	8-2
8.2.1	Oppositely Induced Fields	8-2
8.2.2	Transmission Line Analogy	8-2
8.2.3	Nonuniform Shielding	8-4

TABLE OF CONTENTS (Continued)

Paragraph		Page
8.3	SHIELDING EFFECTIVENESS OF CONTINUOUS SINGLE-THICKNESS SHIELDS	8-4
8.3.1	Absorption Loss	8-5
8.3.2	Reflection Loss	8-6
8.3.2.1	Low Impedance Field	8-10
8.3.2.2	Plane Wave Field	8-13
8.3.2.3	High Impedance Field	8-15
8.3.3	Re-Reflection Correction Factor	8-19
8.3.4	Total Shielding Effectiveness	8-19
8.3.4.1	Measured Data	8-27
8.3.4.2	Summary	8-27
8.4	SHIELDING EFFECTIVENESS OF OTHER SHIELDS	8-31
8.4.1	Multiple Solid Shields	8-31
8.4.2	Coatings and Thin-Film Shields	8-32
8.4.3	Screens and Perforated Metal Shields	8-33
8.5	SHIELD DISCONTINUITY EFFECTS (APERTURES)	8-41
8.5.1	Seams Without Gaskets	8-42
8.5.2	Seams With Gaskets	8-45
8.5.3	Penetration Holes	8-45
8.5.3.1	Waveguide-Below-Cutoff	8-50
8.5.3.2	Screen and Conducting Glass	8-52
8.6	SELECTION OF SHIELDING MATERIALS	8-53
8.7	USE OF CONVENTIONAL BUILDING MATERIALS	8-56
8.7.1	Concrete	8-56
8.7.2	Reinforcing Steel (Rebar)	8-56
8.8	CABLE AND CONNECTOR SHIELDING	8-59
8.8.1	Cable Shields	8-59
8.8.2	Terminations and Connectors	8-63
8.9	SHIELDED ENCLOSURES (SCREEN ROOMS)	8-63
8.9.1	Demountable (Modular) Enclosures	8-66
8.9.2	Custom Built Rooms	8-70
8.9.3	Foil Room Liners	8-71
8.10	TESTING OF SHIELDS	8-72
8.10.1	Low Impedance Magnetic Field Testing Using Small Loops	8-73
8.10.2	Additional Test Methods	8-74
8.11	PERSONNEL PROTECTION SHIELDS	8-74
8.12	DETERMINATION OF SHIELDING REQUIREMENTS	8-74
8.12.1	Equipment Disturbances	8-76
8.12.2	Electromagnetic Environmental Survey	8-76
8.12.3	Equipment EMI Properties	8-77

TABLE OF CONTENTS (Continued)

Paragraph		Page
8.13	SYSTEM DESIGN CONSIDERATIONS	8-77
8.13.1	Size	8-78
8.13.2	Layout	8-78
8.13.3	Signal Properties	8-78
8.13.4	Cost	8-78
8.14	REFERENCES	8-79

CHAPTER 9 - PERSONNEL PROTECTION

9.1	ELECTRIC SHOCK	9-1
9.1.1	Levels of Electric Shock	9-1
9.1.2	Shock Prevention	9-3
9.2	STATIC ELECTRICITY	9-3
9.3	RADIO FREQUENCY (RF) RADIATION HAZARDS	9-5
9.4	LASER HAZARDS	9-5
9.5	X-RAY RADIATION.	9-6
9.6	REFERENCES	9-6

CHAPTER 10 - NUCLEAR EMP EFFECTS

10.1	INTRODUCTION	10-1
10.2	EMP GENERATION.	10-1
10.2.1	High-Altitude EMP (HEMP).	10-1
10.2.1.1	Early-Time HEMP.	10-1
10.2.1.2	Late-Time HEMP (MHDEMP)	10-3
10.2.1.3	Intermediate-Time HEMP	10-3
10.2.2	Surface-Burst EMP	10-3
10.2.3	Other EMP Phenomena	10-4
10.2.4	Comparison With Lightning.	10-5
10.3	HEMP INTERACTION WITH SYSTEMS.	10-5
10.3.1	Current in Long Lines	10-6
19.3.1.1	Long Overhead Lines	10-6
10.3.1.2	Long Buried Lines.	10-7
10.3.1.3	Vertical Structures	10-9
10.3.2	HEMP Interaction With Local Structure	10-9
10.3.2.1	Shields	10-9
10.3.2.2	Penetrating Conductors	10-10
10.3.2.3	Apertures	10-11

TABLE OF CONTENTS (Continued)

Paragraph		Page
10.4	PROTECTION AGAINST HEMP	10-13
10.4.1	HEMP Barrier	10-13
10.4.1.1	Shield	10-13
10.4.1.2	Penetrating Conductors	10-13
10.4.1.3	Apertures	10-15
10.4.2	Allocation of Protection	10-15
10.4.2.1	Amount of Protection Needed	10-15
10.4.2.2	Where Protection is Applied	10-17
10.4.2.3	Terminal Protection Devices	10-17
10.4.2.3.1	Spark Gaps and Gas Tubes	10-17
10.4.2.3.2	Metal-Oxide Varistors	10-18
10.4.2.3.3	Semiconductors	10-18
10.4.2.3.4	Filters	10-18
10.4.2.4	Waveguide Penetration of Facility Shield	10-19
10.4.2.4.1	Introduction	10-19
10.4.2.4.2	In-Line Waveguide Attachment	10-21
10.4.2.4.2.1	Sleeve and Bellows Attachment	10-21
10.4.2.4.2.2	Braided Wire Sleeve	10-23
10.4.2.4.2.3	Stuffing Tube for Waveguide	10-24
10.5	REFERENCES	10-25

CHAPTER 11 - NOTES

11.1	SUBJECT TERM (KEY WORD) LISTING	11-1

APPENDIX D

NOTE: This appendix is a subjective index of material contained in both volumes of MIL-HDBK-419A. The Roman numeral preceding the page number identifies the volume of interest.

INDEX A

Absorption loss, shield, I: 8-5, 8-8, 8-9, 8-27; II: 1-160, 1-162
equations for, I: 8-6
nomograph for, II: 1-161

AC resistance, I: 5-5

Air terminals, I: 3-13; II: 1-24, 1-27 to l-33, 1-41, 1-179
height, II: 1-27, 1-28
location, II: 1-24 to 1-33
materials, II: 1-24
also see cone of protection

Amplifiers, grounding of, I: 6-19; II: 3-35 to 3-40

Analog devices, grounding of, II: 3-35

Antenna effects, I: 3-18, 6-14, 6-15
of groundwires, I: 6-16
and EMP pickup, I: 10-9
and lightning induced surges, I: 3-17

Apertures, shield, I: 8-32, 8-41, 10-11, 10-12, 10-15; II: 3-28
equations for, I: 8-34
control of leakage through, I: 8-42; II: 3-28

Arctic grounding, I: 2-66
electrode resistance, I: 2-71
improve grounding, I: 2-70
installation and measurements, I: 2-71
soil resistivity, I: 2-66

Armored cable, I: 8-60; II: 1-103, 1-171, 1-173
grounding of, II: 1-103
relative shielding effectiveness of, I: 8-60; II: 1-171

Arrester, surge, I: 3-25, 10-17 to 10-19; II: 1-59 to 1-70

Attractive area, I: 3-10
definition of, I: 3-10
how to determine, I: 3-11
also see effective height and cone of protection

APPENDIX D (Continued)

INDEX B

Balancing, use of, I: 6-23; II: 3-4, 3-7
amplifiers, I: 6-21
signal lines, I: 6-24; II: 3-4, 3-7
also see noise minimization

Body resistance, human, I: 9-1

Bolting, I: 7-14; II: 1-140, 2-10
also see bond, electrical

Bond (and bonding), electrical, I: 7-l to 7-36; II 1-78, l-109, 1-140, 1-195,1-199, 3-18
area, I: 7-8
assembly, I: 7-10 to 7-17
completion of, It 7-29; II: 1-140
connectors of, II: 1-140, 3-20, 3-27
contaminants, I: 7-7
definition, I: 7-l
direct, I: 7-4
earth electrode system, in, II: 1-22, 2-5
equipment, II: 3-18
guidelines for, I: 7-36; II: 1-140, 3-18
indirect, I: 7-16
also see bond strap
inspection of, II: 1-195, 2-5, 2-13, 3-49
lightning protection system, in, II: 1-79, 2-13
protection of, I: 7-29; II: 1-143 to 1-146
purposes of, I: 7-1
resistance, I: 7-3, 7-6; II: 1-194, 1-195, 2-10, 2-17, 2-19
shields in, I: 8-33, 8-41; II: 1-162, 3-25
structured, II: 1-140, 2-10
techniques, I: 7-10; II: 1-140
comparison of, I: 7-16
testing of, II: 2-19
torque, I: 7-7; II: 1-141
table of, II: 1-141
washer, use of, I: 7-15
workmanship, I: 7-34

APPENDIX D (Continued)

INDEX B

Bond Protection Code, II: 1-143 to l-147

Bond strap (or jumper), I: 7-21; II: 1-147 to 1-153, 2-10, 3-18
frequency, effects of, I: 7-19
guidelines for use of, II: 1-148 to 1-153, 2-10, 3-18
ℓ/b ratio, recommended, I: 7-21

Braided straps, I: 7-21

Brazing, I: 7-11; II: 1-140, 1-142

British Standard Code of Practice, I: 3-13

Buried metals, see incidental electrodes

Bus bar, use of, II: 3-3

INDEX C

Cabinets, grounding of, II: 1-131, 3-16

Cable routing, II: 1-171
    interference control, for, II: 1-171

Cable shields, I: 8-59 to 8-63; II: 1-104, 3-2, 3-4, 3-35, 3-38, 3-49
    bonding of, II: 3-8
    braid, I: 8-59
    conduit as, I: 8-60
    grounding of, I: 8-61; II: 1-104, 3-2, 3-35, 3-38, 3-49
    installation practices, I: 8-61

Cable trays, II: 1-103, 1-148

Calcium chloride, I: 2-60
    also see chemical enhancement

Capacitance coupling, I: 3-21, 6-11

Capacitance, stray, I: 7-23

Cathodic protection, I: 2-63

Chemical enhancement, I: 2-60; II: 1-14, 1-185

Classified Information Processors (RED/BLACK Equipments), II: 1-134, 2-58

Climate, effects of, I: 2-7; II: 1-5, 1-143, 1-144
    on bonds, II: 1-143, 1-144
    on earth electrode subsystem design, II: 1-5
    on soil resistivity, I: 2-5

Common-mode noise, I: 6-17 to 6-23

Common-mode rejection ratio, I: 6-21

Component damage, I: 10-15 to 10-17

INDEX C

Compton electrons, I: 10-1 to 10-3

Concrete enclosed electrodes, I: 2-62

Conductive coupling, I: 6-5, 6-19

Conductor length criteria, ground, II: 1-57

Conductor parameters, I: 3-17, 5-1
- ac resistance, I: 5-5
- dc resistance, I: 5-1
- proximity effects, I: 5-10
- reactance, I: 5-7
- also see inductance and skin effect

Conductor routing, see cable routing

Conductor selection, grounding, I: 5-1 to 5-19; II: 1-107
- I-beams, I: 5-15
- rectangular bars, I: 5-13
- stranded cables, I: 5-13
- tubular (pipes), I: 5-13

Conduit, I: 8-60; II: 1-56, 1-74, l-75, l-103, 1-149, 1-159
- as a shield, I: 8-60; II: 1-159
- grounding of, II: 1-56, l-75, 1-103

Cone of protection, I: 3-11; II: 1-27 to 1-33
- definition of, I: 3-13
- example of, I: 3-13; II: 1-28
- means of determining, II: l-28, 1-30 to 1-33

Connectors, I: 8-59; II: 1-173, 3-13, 3-20, 3-49
- bonding of, II: 1-173, 3-13, 3-20, 3-49
- shields, I: 8-59

Contaminants, bond, I: 7-7; II: 1-142
- removal of, I: 7-25; II: 1-142

APPENDIX D (Continued)

INDEX C

Convenience outlets, II: 1-104, 3-14, 3-49
grounding of, II: 1-104, 3-14
inspection of, II: 3-49

Copper sulfate, I: 2-60
also see chemical enhancement

Corrosion, I: 7-29 to 7-35; II: 1-98, 1-99, 1-145, 1-146
in bonds, I: 7-30
protection against, I: 7-34; II: 1-98, 1-99, 1-145, 1-146
theory, I: 7-30
also see dissimilar metals

Counterpoise, II: 1-15, 1-19

Coupling, I: 6-1
capacitive, I: 6-11
conductive, I: 6-5
far-field, I: 6-14 to 6-17
free-space, I: 6-6
inductive, I: 6-8
near-field, I: 6-6
radiated, I: 6-14

APPENDIX D (Continued)

INDEX D

Demountable enclosures, I: 8-66

Digital data systems, grounding of, II: 3-40

Discrepancy report, major, II: 2-38

Dissimilar metals, I: 7-31; II: 1-143, l-145, 1-146

Down conductor, lightning, I: 3-17; II: 1-34, 1-37 to 1-39
    location, II: 1-37, 1-39
    routing, I: 3-17; II: 1-37, 1-39
    size, II: 1-34

Drawings, requirements for, II: 2-4, 3-43

APPENDIX D (Continued)

INDEX E

Earth electrode, I: 1-2, 2-1, 2-15; II: 1-2 to 1-22, 1-193, 1-196, 2-5, 2-39, 2-40
current handling capacity, I: 2-57; II: 1-6
design, II: 1-2, 1-6 to 1-14
effective size of, I: 2-58
encasement, I: 2-62
enhancement, I: 2-59
functions of, I: 2-1; II: 1-6
heating, I: 2-57
impulse impedance, I: 2-32; II: 1-6
inspection of, II: 1-193, 2-5
installation practices, II: 1-22, 1-193
measurement, I: 2-35
resistance, I: 2-17; II: l-9, 1-193
subsystem, I: 1-2; II: 1-193, 1-196
types of, I: 2-15

Earth resistance testing, I: 2-23, 2-35, 2-46; II: 1-9, 1-193, 2-5
fall-of-potential method, I: 2-35
large electrode system for, I: 2-44
three-point method of, I: 2-46

Effective height, I: 3-11
also see cone of protection

Electric dipole, I: 6-15

Electric shock, I: 9-1

Electrical equipment, grounding of, II: l-104, 1-133

Electrical noise in communication systems, I: 1-4

Electrical noise reduction, I: 1-2

Electrical supporting structures, grounding of, II: 102 to 104

Electrochemical series, I: 7-31

APPENDIX D (Continued)

INDEX E

Electromagnetic interference (EMI), I: 1-4, 8-74, 8-77; II: 1-113

Electromagnetic survey, I: 8-76; II: 1-154, 2-17

EMP (Electromagnetic Pulse), I: 10-1 to 10-25; II: 1-172 to 1-177, 1-187, 1-190, 3-50
- comparison with lightning, I: 10-5
- current in long lines, I: 10-6 to 10-9
- description, I: 10-1 to 10-5
- equipment susceptibility to, I: 10-22
- high-altitude EMP (HEMP), I: 10-5 to 10-25
- protection, I: 10-13 to 10-25; II: 1-172 to l-177, 1-187, 1-190, 3-50

Enclosures, electrical, II: 1-103, 3-27 to 3-33

Enclosures, shielded, I: 8-63

Epoxy, conductive, I: 7-16

Equipment grounding, II: 3-1 to 3-19
- cabinet, of, II: 3-16, 3-46
- fault protection, for, II: 3-14
- inspection of, II: 3-43
- signal network, II: 3-2

Equipment protection, I: 1-2

Equipment susceptibility, I: 10-15; II: 1-50

Equipotential plane, I: 5-26, 5-27; II: 1-120 to 1-133

Existing facilities, II: 2-1 to 2-54
- expansion or modification of, II: 2-35
- survey of, II: 2-4 to 2-32
- upgrading, guidelines for, II: 2-33

APPENDIX D (Continued)

INDEX F

Facility ground system, II: 1-113, 1-118 to 1-123, 1-199
combined elements, II: 1-121
description of, II: 1-113
structural steel as used in, II: 1-118, 1-120

Facility maintenance report, II: 2-46

Facility survey, II: 2-4, 2-24

Fall-of-potential method, I: 2-35 to 2-46; II: 1-182, 2-6
theory of, I: 2-35

Far-field coupling, I: 6-14 to 6-17

Fasteners, II: 1-39, 1-40, 1-147

Fault protection, I: 1-3, 2-2, 4-1

Faults, electrical, I: 2-2, 4-1; II: l-6, 3-14
cause of, I: 4-1
protective measures against, I: 4-1; II: 1-6, 3-14

Feeder ground plate, II: 3-47

Field, high impedance, I: 8-15
low impedance, I: 8-10
plane wave, I: 8-13

Filters, I: 6-25, 10-18; II: 3-26

Forms, II: 1-195 to 1-200, 2-24 to 2-32, 2-38, 2-46 to 2-53, 3-50 to 3-54
equipment inspection, II: 3-50 to 3-54
facility checkout, II: 1-195 to 1-200
facility maintenance report, II: 2-46 to 2-53
facility survey, II: 2-24 to 2-32
major discrepancy report, II: 2-38

Four-probe method, I: 2-15; II: 1-2 to 1-5
also see resistivity, soil

Frost line, II: 1-6

INDEX G

Galvanic series, I: 7-31

Gaskets, RF, I: 8-45; II: 1-162, 3-20, 3-22, 3-27, 3-49

Geological factors, II: 1-5

Glass, conductive, I: 8-52; II: 1-164

Ground fault interrupter (GFI), I: 4-2

Ground, floating, I: 5-15

Ground grid (or mesh), I: 2-15, 2-27, 2-33, 2-55, 5-27; II: 1-8

Ground, multipoint, I: 5-24 to 5-28; II: 1-120

Ground network configuration, I: 5-18

Ground network isolation, I: 5-28; II: 3-4

Ground rods, I: 2-15, 2-23, 2-27, 2-33, 2-48; II: 1-8 to 1-22, 1-178
- arrays of, I: 2-27; II: 1-12
- parallel, I: 2-23; II: 1-12
- placement of, II: 1-14 to 1-19
- resistance, equations for, I: 2-17; II: l-9, 1-178
- resistance, nomograph of, II: 1-11
- selection of, II: 1-9 to 1-15
- sizes of, I: 2-15
- spacing of, I: 2-15
- step voltage of, I: 2-48

Ground, single-point, I: 5-19 to 5-24; II: 3-43

Ground system, I: 1-2

Grounding, electrical power system, I: 1-3; II: 1-179, 2-16
- single-phase, I: 4-4; II: 1-179
- three-phase, I: 4-4; II: 1-178

APPENDIX D (Continued)

INDEX G

Grounding safety, I: 1-5

Grounding, signal, I: 5-1 to 5-32; II: 1-113 to 1-133, 1-185 to 1-188, 2-17, 2-31, 3-1, 3-43
- equipment in, II: 3-1
- facilities, in, II: 1-113
- network configurations, I: 5-18 to 5-31; II: 1-113, 1-186, 1-187, 2-17, 2-31
- purposes of, I: 5-1

Guards (down conductor), II: 1-41, 2-13

Guidelines for
- bonding, I: 7-36; II: 1-148 to 1-151, 1-173, 1-188, 1-195
- earth electrode subsystem design, I: 1-14 to 1-22
- earth electrode subsystem installation, II: 1-22
- EMP protection, I: 10-13 to 10-25; II: 1-173, 1-188, 3-42
- equipment inspections, II: 3-43
- facility inspections, II: 1-195
- facility upgrading, II: 2-1, 2-33 to 2-37
- lightning protection, II: 1-23 to l-46
- personnel safety, I: 9-2
- shielding, I: 8-54; II: 1-159

INDEX H

HemisphericaI electrodes, I: 2-8 to 2-16

HEMP (High-Altitude EMP), I: 10-5 to 10-25
- protection against, I: 10-13 to l-25

Higher frequency grounding, I: 5-30, 5-31; II: 1-113 to 1-132, 1-194, 3-12, 3-47
- equipment, in, II: 3-12, 3-47
- facilities, in, I: 5-31; II: 1-113
- network configurations, I: 5-30

Honeycomb, see waveguide-below-cutoff

Horizontal earth electrodes, I: 2-15, 2-23, 2-24; II: 1-8

Hybrid equipments, II: 3-47

INDEX I

Incidental electrodes, I: 2-53, 2-55; II: 1-8, 1-15

Inductance, I: 5-7, 7-17, 7-19 to 7-25

Inductive coupling, I: 6-8 to 6-10

Inspection procedures, II: 1-193 to 1-200, 2-1, 2-39 to 2-53, 3-43
- equipment, II: 3-43
- existing facilities, II: 2-1
- maintenance, II: 2-39 to 2-53
- new facilities, II: 1-193 to 1-200

Instrumentation, grounding of, II: 1-172, 3-34, 3-49

Instrumentation, test, II: 2-19 to 2-23

Interfacing, signal, II: 3-4, 3-13

Interference coupling, I: 6-1

Interference reduction, see electromagnetic interference

Isolation, ground network, I: 5-28; II: 3-4

Isokeraunic, I: 3-4 to 3-11

INDEX J

Jumper, see bond strap

INDEX L

Labels, ground network, II: 3-3, 3-47

Laser hazards, I: 9-5

Layered earth, I: 2-32 to 2-36

Let-go current, I: 9-2

Lightning, I: 1-2, 2-1, 3-1 to 3-27; II: 1-23 to 1-43, 1-49, 1-197, 2-13, 2-41
- cloud to cloud, I: 3-1
- cloud to ground, I: 3-1, 3-3
- cone protection, I: 3-11
- description of, I: 3-1, 3-13 to 3-15
- effects of, I: 3-13 to 3-25
- flash parameters, I: 3-13
- network inspection procedures, II: 1-197, 2-13, 2-41
- personnel hazards, I: 2-5, 2-47, 3-25
- protective measures, I: 3-15, 3-25; II: 1-23 to 1-43, 1-49
- strike prediction, I: 3-4 to 3-11
- triggered, I: 3-4

Lightning discharge, I: 2-1

Lightning protection code, I: 3-13, 3-27

Lightning protection subsystem, I: 1-2

Lightning rods, see air terminals

Lower frequency grounding, I: 5-29; II: 3-2
- equipment in, II: 3-2
- facilities in, I: 5-29
- network configuration, I: 5-29

APPENDIX D (Continued)

INDEX M

Magnesium sulfate, I: 2-60
also see chemical enhancement

Maintenance, II: 2-36 to 2-58
procedures, II: 2-36, 2-39 to 2-47
records, II: 2-36
report form, II: 2-46 to 2-53
schedules, II: 2-36

Master Labeled Protection System, I: 3-27, 7-14; II: 2-13

Masts (lightning) protective, II: 1-23, 1-40 to 1-43

Metal framework, earth electrode, I: 2-16

MIL-C-5541, II: 1-145, 1-146

MIL-E-45782B, I: 8-63

MIL-STD-285, I: 8-73

MIL-STD-462, I: 8-73

MIL-STD-1377, I: 8-73

MIL-STD-10727, II: 1-145, 1-146

Mobile facilities, grounding of, II: 1-177 to 1-190

APPENDIX D (Continued)

INDEX N

National Electric Code (NEC), I: 2-2, 2-5, 2-75, 3-21; II: 1-103, 1-104, 1-105, 2-10, 2-13, 3-14, 3-47

Near-field coupling, I: 6-6

Noise, I: l-2, 2-6, 6-3, 6-7, 6-17 to 6-25
- circuit, I: 6-3, 6-7
- common-mode, I: 6-17 to 6-23
- minimization, I: 6-23 to 6-25
- also see electromagnetic interference

Noise reduction, I: 2-2

Noise survey, II: 2-17

Nomograph
- bolts, torque on, I: 7-15
- ground rod resistance, of, II: 1-11
- shield absorption loss, of, II: 1-161
- shield electric field reflection loss, of, II: 1-166
- shield magnetic field reflection loss, of, II: 1-165
- shield plane wave reflection loss, of, II: 1-167
- skin effect, for, I: 5-8

Nuclear EMP effects, I: 10-1 to 10-25

INDEX O

Oppositely induced fields, I: 8-2

Overhead ground wire, II: 1-41 to 1-43

APPENDIX D (Continued)

INDEX P

Perception current, I: 9-1

Personnel protection, I: 2-1, 2-5, 3-27, 7-1

Personnel safety, I: 1-2

Pilot streamer, I: 3-3

Pipes, utility, grounding of, I: 2-15; II: 1-102

Plates electrodes, I: 2-15, 2-23; II: 1-8

Protection, equipment, I: 1-2

Protective coatings, I: 7-34; II: 1-140, 1-145, 1-146
    bonds, for, I: 7-30; II: 1-145, 1-146
    bond washers, for, II: 1-140

Proximity effect, I: 5-10

APPENDIX D (Continued)

INDEX R

Radio frequency (RF) radiation hazards, I: 9-5

Reactance, I: 5-7

Reaction current, I: 9-2

Recording devices, grounding of, II: 3-40, 3-42

Rectangular conductor, I: 5-13

Reflection loss of electromagnetic shield, I: 8-6; II: 1-161, 1-165 to 1-168
- electric field, for, I: 8-13; II: 1-166
- equations for, I: 8-6
- magnetic field, for, I: 8-11; II: 1-165
- plane wave, for, I: 8-15; II: 1-161, 1-167
- theory of, I: 8-1

Reinforcing steel as shield, properties of, I: 8-56, II: 1-154, 1-156

Re-reflection correction factor, I: 8-19

Resistance requirements, I: 2-5

Resistive coupling, see conductive coupling

Resistivity mapping, soil, II: 1-4

Resistivity, soil, I: 2-5; II: 1-2 to 1-5,
- measurement of, I: 2-8; II: 1-2 to 1-5
- ranges, I: 2-7
- temperature, as a function of, I: 2-8

RF radiation hazards, I: 9-5

Rivets (as bonds), I: 7-15

Roof conductor, lightning, I: 3-26; II: 1-24, 1-33 to 1-37
- location, II: 1-24, 1-33 to 1-37
- routing, II: 1-33 to 1-37
- size, I: 1-24

INDEX S

Sacrificial anodes, I: 2-63
also see cathodic protection

Safety grounding, I: 1-2, 1-5, 4-l; II: 2-13

Salting methods (for electrode enhancement), I: 2-63; II: 1-185

Saltpeter, I: 2-60
also see chemical enhancement

Screen room, see shielded enclosures

Selection criteria, I: 2-1, 3-1, 7-1, 8-l; II: 1-6 to 1-9
bonds, for, I: 7-1
earth electrode subsystem, for, I: 2-1; II: 1-6 to 1-9
lightning protection, for, I: 3-1
shielding, for, I: 8-1

Semiconductor surge arresters, I: 10-18
also see arresters, surge

Shielded enclosures, I: 8-63 to 8-72
custom built, I: 8-70
double walled, I: 8-71
modular, I: 8-66

Shielding angle, see cone of protection

Shielding effectiveness (SE), I: 8-4, 8-19, 8-31, 8-59; II: 1-155 to 1-160, 1-168
building materials, of, I: 8-59; II: 1-155 to 1-160, 1-168
definition of, I: 8-4
equations for, I: 8-31
layered shields, of, I: 8-31
single thickness shields, of, I: 8-4
tables of, I: 8-6 to 8-54
also see absorption loss, reflection loss, and shields

INDEX S

Shielding, electromagnetic, I: 8-1
functions of, I: 8-1
theory of, I: 8-2

Shielding requirement, I: 8-14

Shields, I: 8-31; II: 1-154 to 1-165, 2-19, 3-25, 3-27, 3-35, 3-42, 3-53
components, II: 3-25
configuration of, I: 8-63; II: 1-162
design of, I: 8-74; II: 1-159
discontinuous, see apertures
equipment, guidelines for, II: 3-25
grounding of, I: 8-70; II: 1-162, 3-26, 3-35
inspection of, II: 2-19, 3-53
magnetic, I: 8-20, 8-41; II: 1-165, 3-42
material selections for, I: 8-53; II: 1-160, 1-162, 3-42
metal foils as, I: 8-71
personnel protection, I: 8-74; II: 1-159
seams in, I: 8-42; II: 1-162, 3-27, 3-49
testing of, I: 8-72
thin film I: 8-31; II: 1-162

Shields, perforated, I: 8-33, 8-52; II: l-162,3-30
honeycomb, I: 8-52; II: 1-162, 3-30
screens, I: 8-33, 8-52; II: 3-30

Shock hazards, electric, I: 9-1 to 9-3
effects on human body, I: 9-1
prevention of, I: 9-3

Signal grounding terminals, II: 3-1, 3-44, 3-46

Signal reference, I: 1-3; II: 3-1, 3-35

Silver solder (for bonding), I: 7-14; II: 1-140

Site selection, II: 1-2 to 1-6

APPENDIX D (Continued)

INDEX S

Site survey, I: 8-74; II: 1-2 to l-6, 2-17

Skin effect, I: 5-3, 5-5, 5-8
formulas for, I: 5-5
nomograph of, I: 5-8

Sodium chloride, I: 2-60
also see chemical enhancement

Soft solder (for bonding), I: 7-14; II: 2-10

Soil enhancement, see chemical enhancement

Soil resistivity, I: 2-7; II: l-2, 1-6

Solvents, use of, I: 7-26

Spark gaps, I: 10-17
also see arresters, surge

Standby generators, II: 1-104

Static electricity, I: 5-19, 9-3, 9-4

Step voltage, I: 2-49

Stepped-leader, I: 3-1

Stray current, I: 2-2, 6-5; II: 2-16, 2-17

Structural steel, I: 5-15; II: 1-39, 1-140, 1-153, 1-154
bonding of, II: 1-140, 1-153, 1-154
ground conductors, as, I: 5-15; II: 1-39

Structures, multiple, II: 1-15, 1-17, 1-18

Stuffing tube, I: 10-24

Surface hardness, see bonding, electrical

Surface preparation, I: 7-25

Surface transfer impedance, I: 8-59

INDEX T

Terminal protection devices, I: 10-17 to 10-19

Test procedures, I: 8-72; II: 1-2 to 1-4, 2-5, 2-16, 2-17, 2-19, 3-43 to 3-46
- bond resistance, II: 2-19, 3-47
- earth electrode resistance, II: 2-5
- ground system noise, II: 2-20
- network isolation, II: 2-19, 3-4, 3-41, 3-44, 3-45
- shields, I: 8-72
- soil resistivity, II: 1-2 to 1-4
- stray current, II: 2-17, 2-20

Three-point method, I: 2-46

Thunderstorm day, see iokeraunic

Transducer grounding, II: 1-172, 3-35

Tubular conductor, I: 5-13

TT-C-490, II: 1-145, 1-146

Twisted wires, use of, I: 6-24; II: 1-171, 3-38, 3-40

INDEX U

Underground cables, protection of, II: 1-45, 1-57

Upgrading proceedings for facilities, II: 2-1, 2-33

INDEX V

Varistors, I: 10-18
also see arrester, surge

Ventilation ports, shielding, of, I: 8-53; II: 1-162

Vertical structures, I: 10-9

INDEX W

Water retention, I: 2-60; II: 1-6

Water system as earth electrodes, I: 2-16; II: 1-182

Waveguide-below-cutoff, I: 8-50; II: 1-162, 1-164

Waveguide penetration, facility shield of, I: 10-19 to 10-25

Welding, I: 7-10; II: 1-22, 1-140, 3-18

Well casings, I: 2-16

Wells, grounding, II: 1-20, 1-22

Workmanship, I: 7-34

INDEX X

X-rays, I: 9-5

Custodians:
Army - SC
Navy - EC
Air Force - 90

Other Interest:
DNA - DS
OST (M-35)

Activity, Assignee
Air Force - 90
(Project SLHC-4191)

Preparing Activity:
Air Force - 90

Review Activities:
Army - SC, CR, AR, AC
Navy - EC, NC, NV, OM
Air Force - 02, 04, 11, 14, 15, 17, 50, 90
DMSSO-SD
DCA - DC
NSA - NS
Joint Tactical C^3 Agency -JT
ECAC

☆U.S. GOVERNMENT PRINTING OFFICE: 1990 - 504-034/30961